Ecoslider greenhouse installation manual

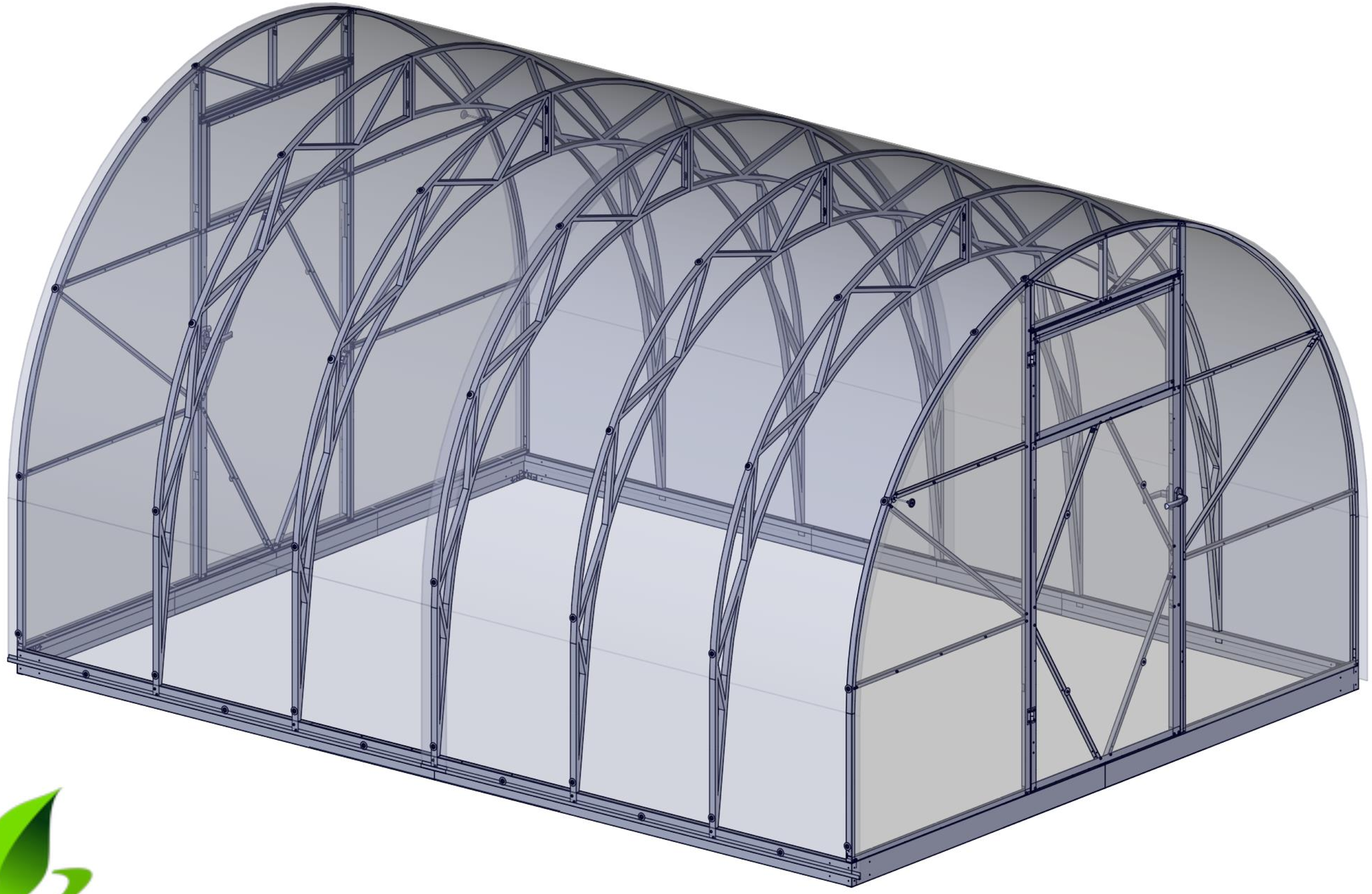

ECOSLIDER

2.

Preparation for work

Tools

Labelling

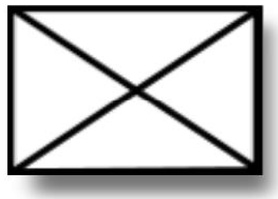

Keep frame squareness

L1=L2

Frame diagonals are equal

90°

This angle is right (90°)

UV

This is the UV-protected side of polycarbonate. Remove the films from both sides immediately before installation.

VU

This is the nonUV-protected side of polycarbonate. Only for using insight of greenhouse

ECOSLIDER

3.

Set

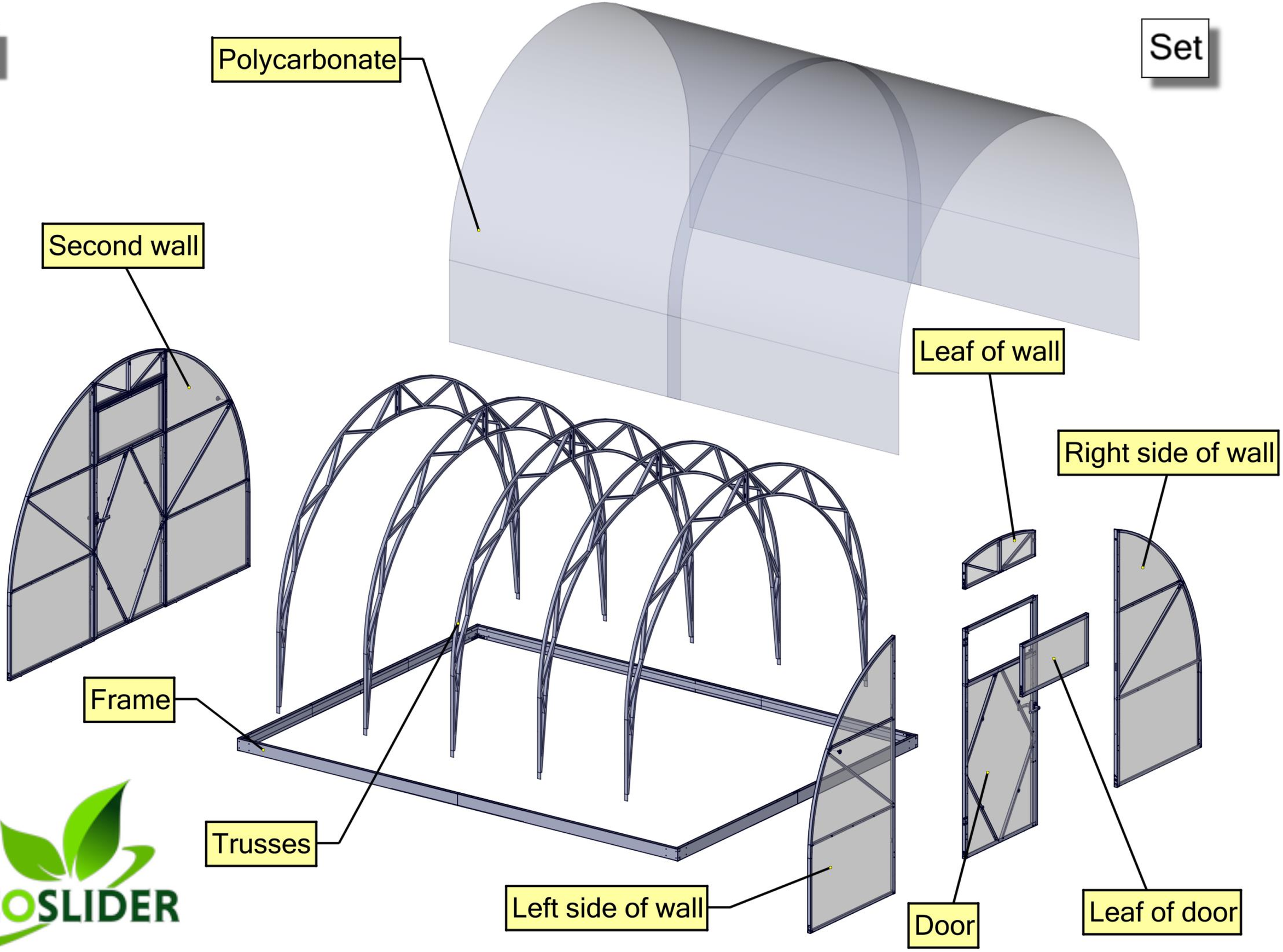

ECOSLIDER

4.

Frame

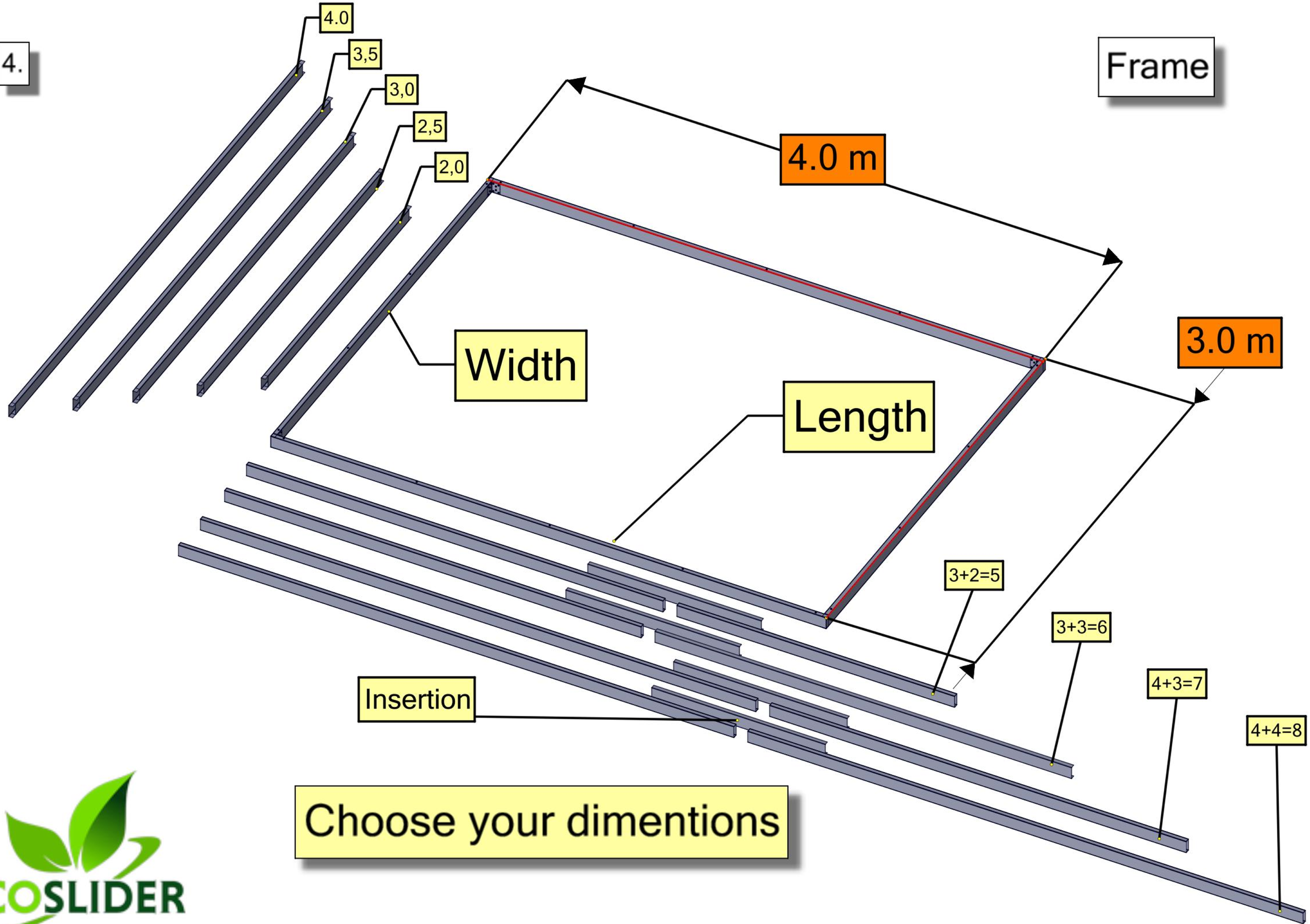

Choose your dimentions

ECOSLIDER

5.

Frame 3x4m

☒ L1=L2

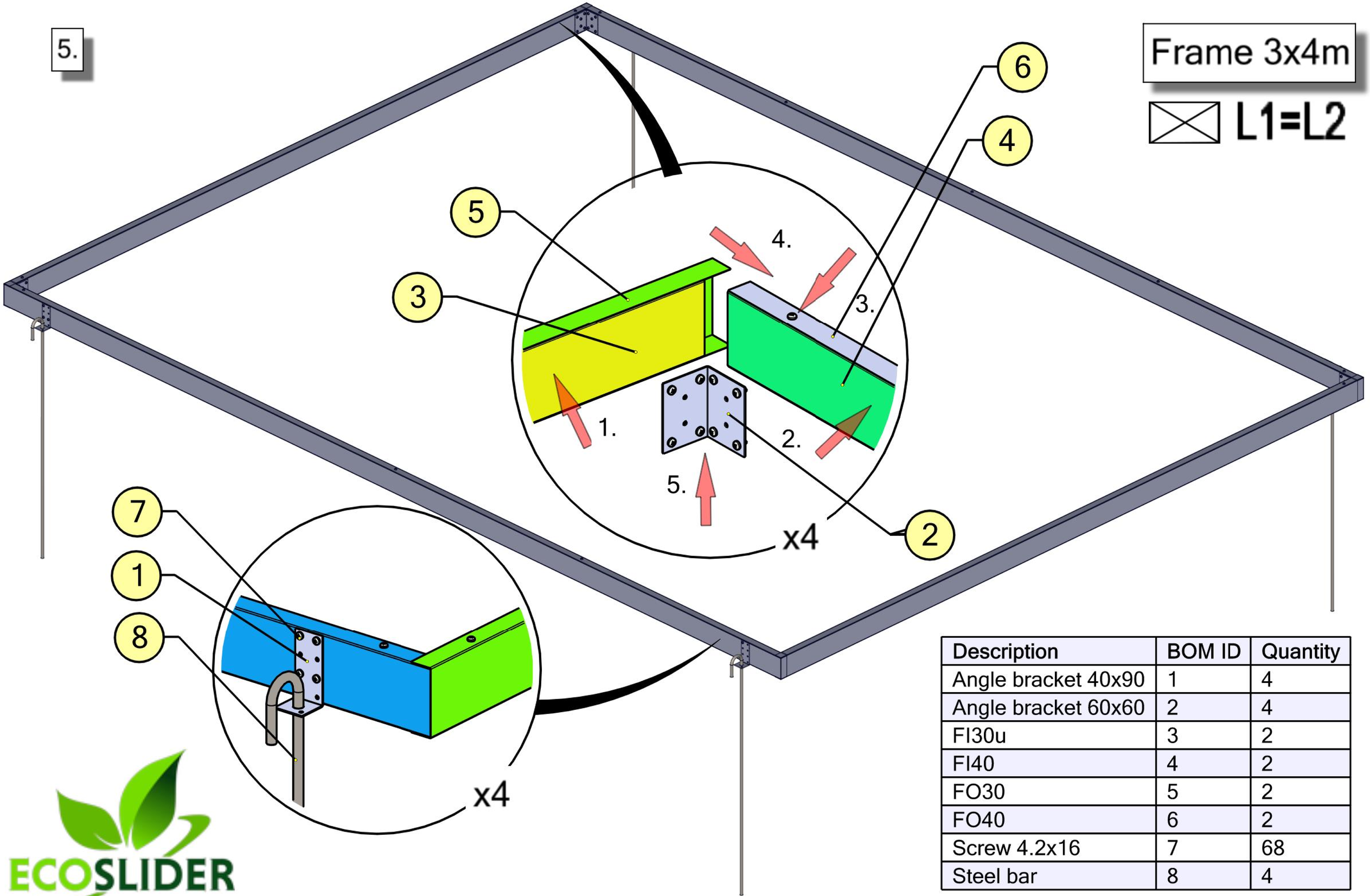

Description	BOM ID	Quantity
Angle bracket 40x90	1	4
Angle bracket 60x60	2	4
FI30u	3	2
FI40	4	2
FO30	5	2
FO40	6	2
Screw 4.2x16	7	68
Steel bar	8	4

ECOSLIDER

6.

Left side of face

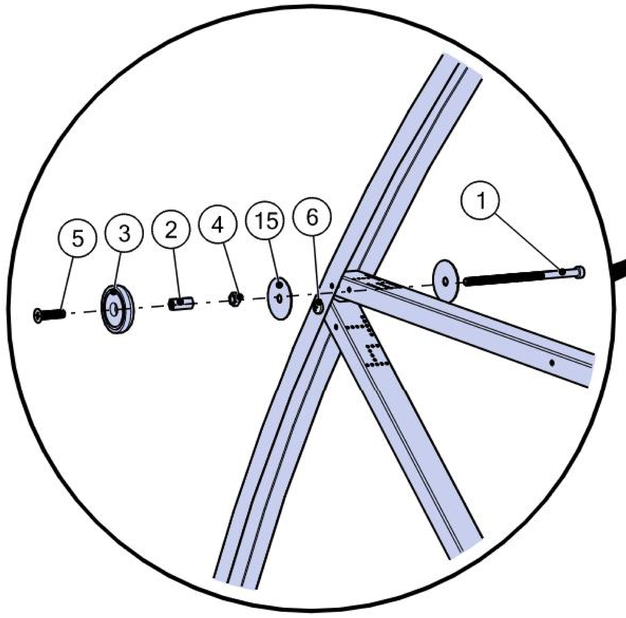

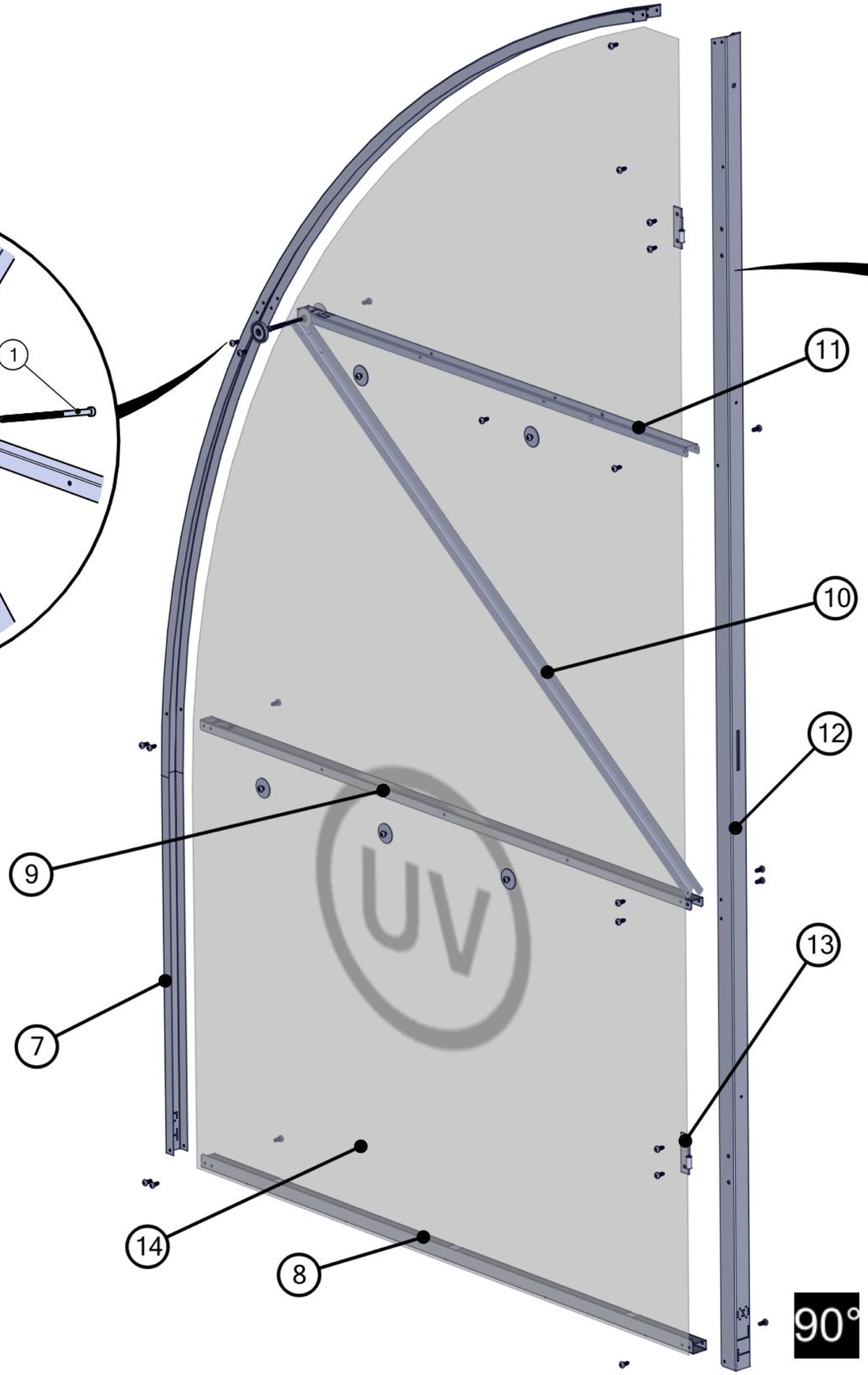

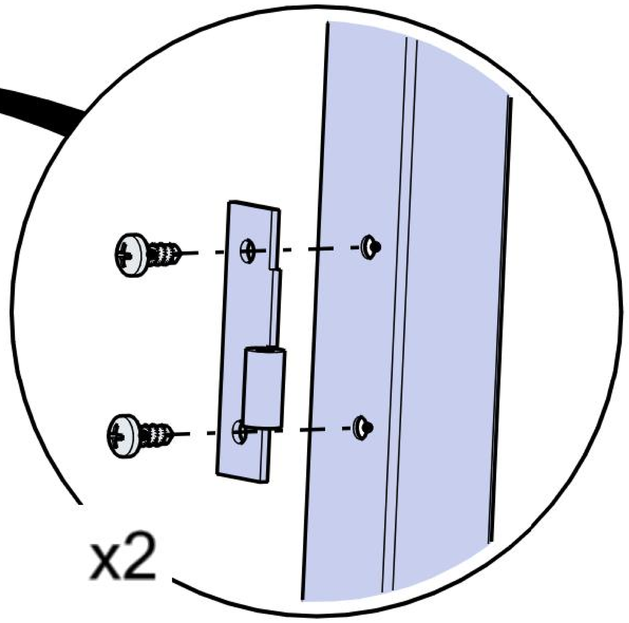

Description	BOM ID	Quantity
Magnet bolt	1	1
Magnet hexagon	2	1
Magnet	3	1
Magnet nut	4	1
Magnet screw	5	1
Screw 4.2x16	6	29
T1	7	1
T2	8	1
T3	9	1
T4	10	1
T5	11	1
TL8	12	1
Wall hinge	13	2
Wall polycarbonate	14	1
Washer	15	7

ECOSLIDER

7.

Door leaf

☒ L1=L2

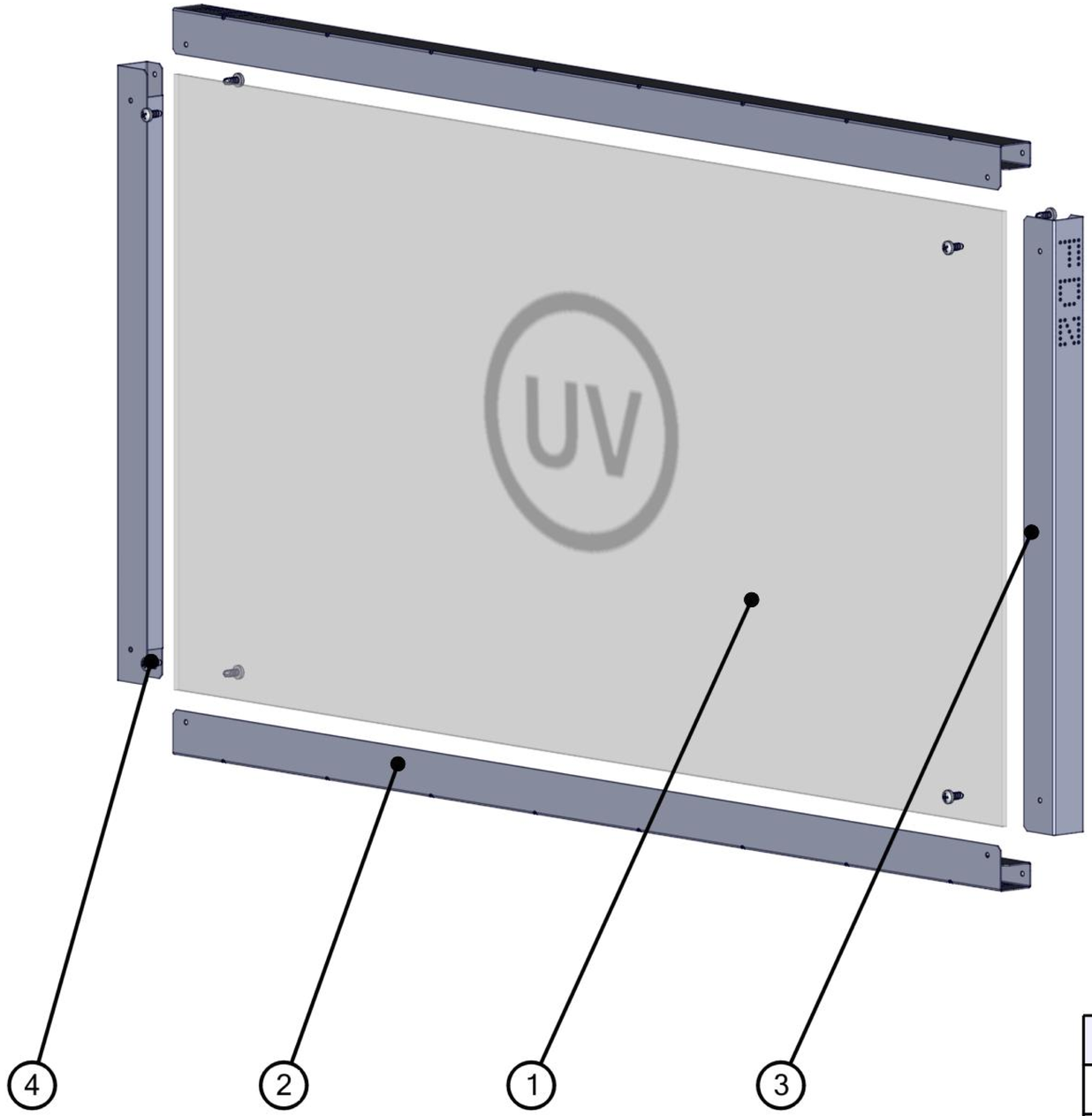

Description	BOM ID	Quantity
Door leaf polycarbonate	1	1
FD1	2	2
FD2	3	2
Screw 4.2x16	4	8

ECOSLIDER

8.

Wall leaf

☒ L1=L2

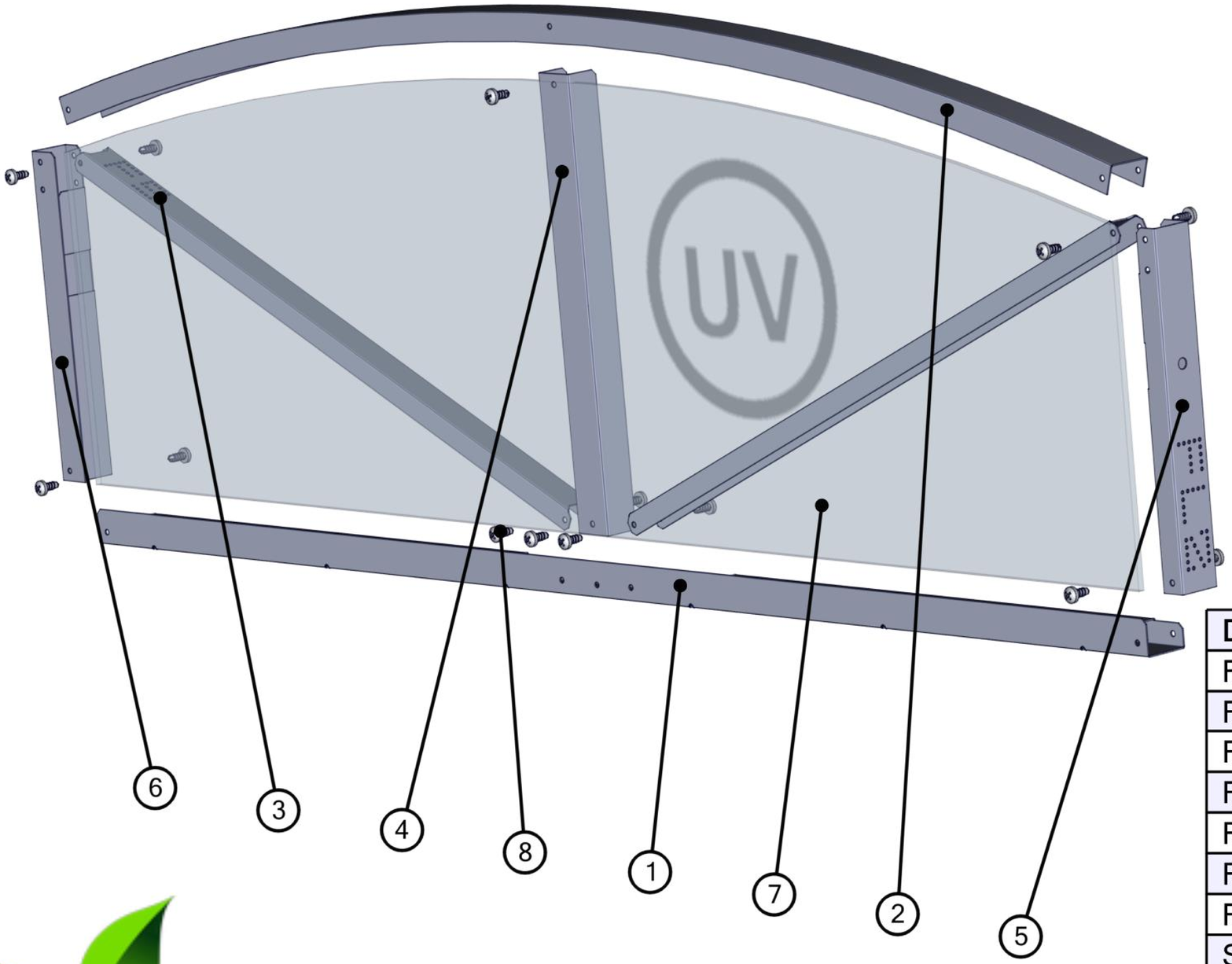

Description	BOM ID	Quantity
F1	1	1
F4	2	1
F5	3	2
F6	4	1
FL2	5	1
FR3	6	1
Face leaf polycarbonate	7	1
Screw 4.2x16	8	14

ECOSLIDER

9.

Door with leaf

☒ L1=L2

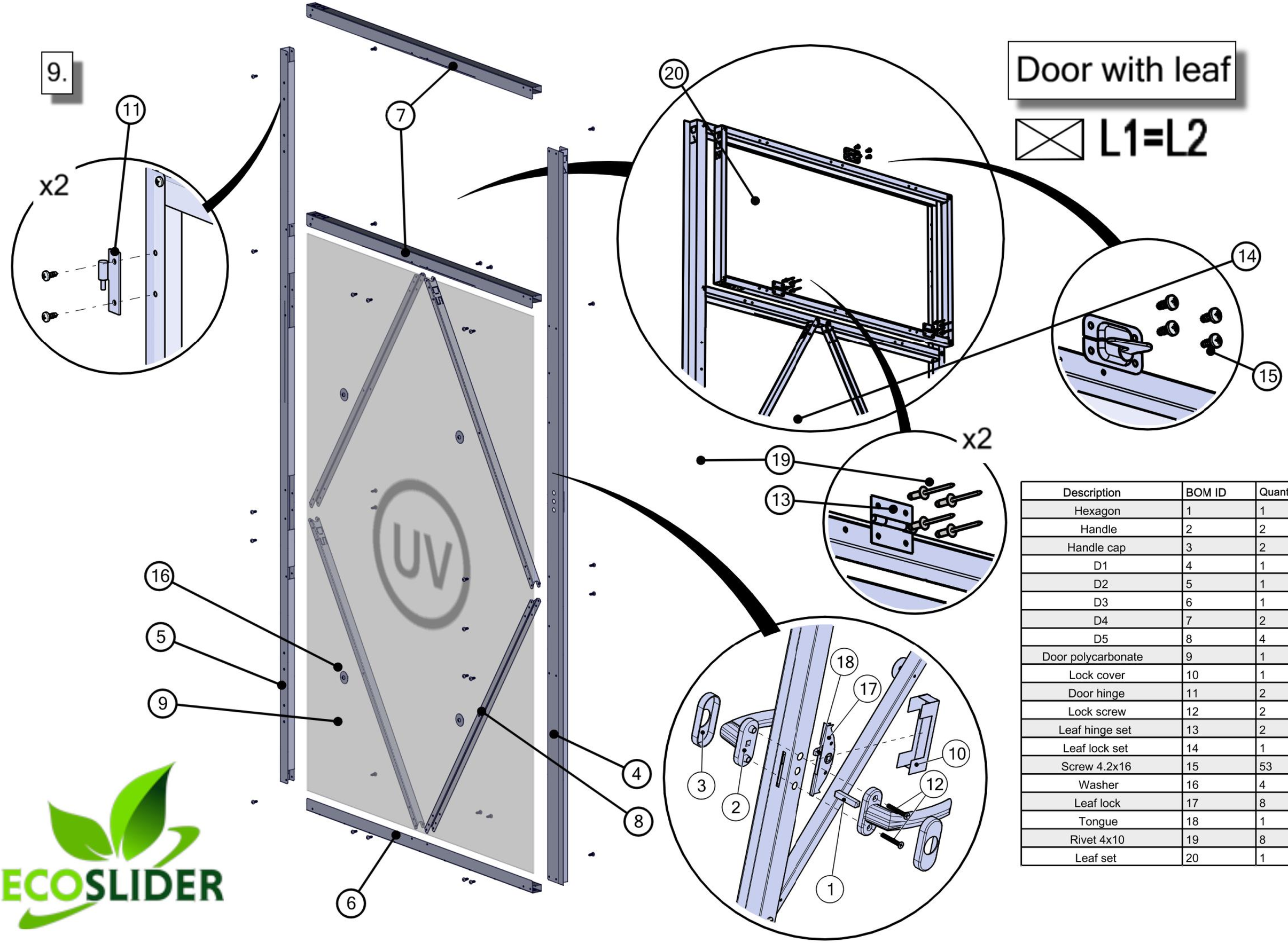

Description	BOM ID	Quantity
Hexagon	1	1
Handle	2	2
Handle cap	3	2
D1	4	1
D2	5	1
D3	6	1
D4	7	2
D5	8	4
Door polycarbonate	9	1
Lock cover	10	1
Door hinge	11	2
Lock screw	12	2
Leaf hinge set	13	2
Leaf lock set	14	1
Screw 4.2x16	15	53
Washer	16	4
Leaf lock	17	8
Tongue	18	1
Rivet 4x10	19	8
Leaf set	20	1

ECOSLIDER

10.

Door without leaf (optional)

☒ L1=L2

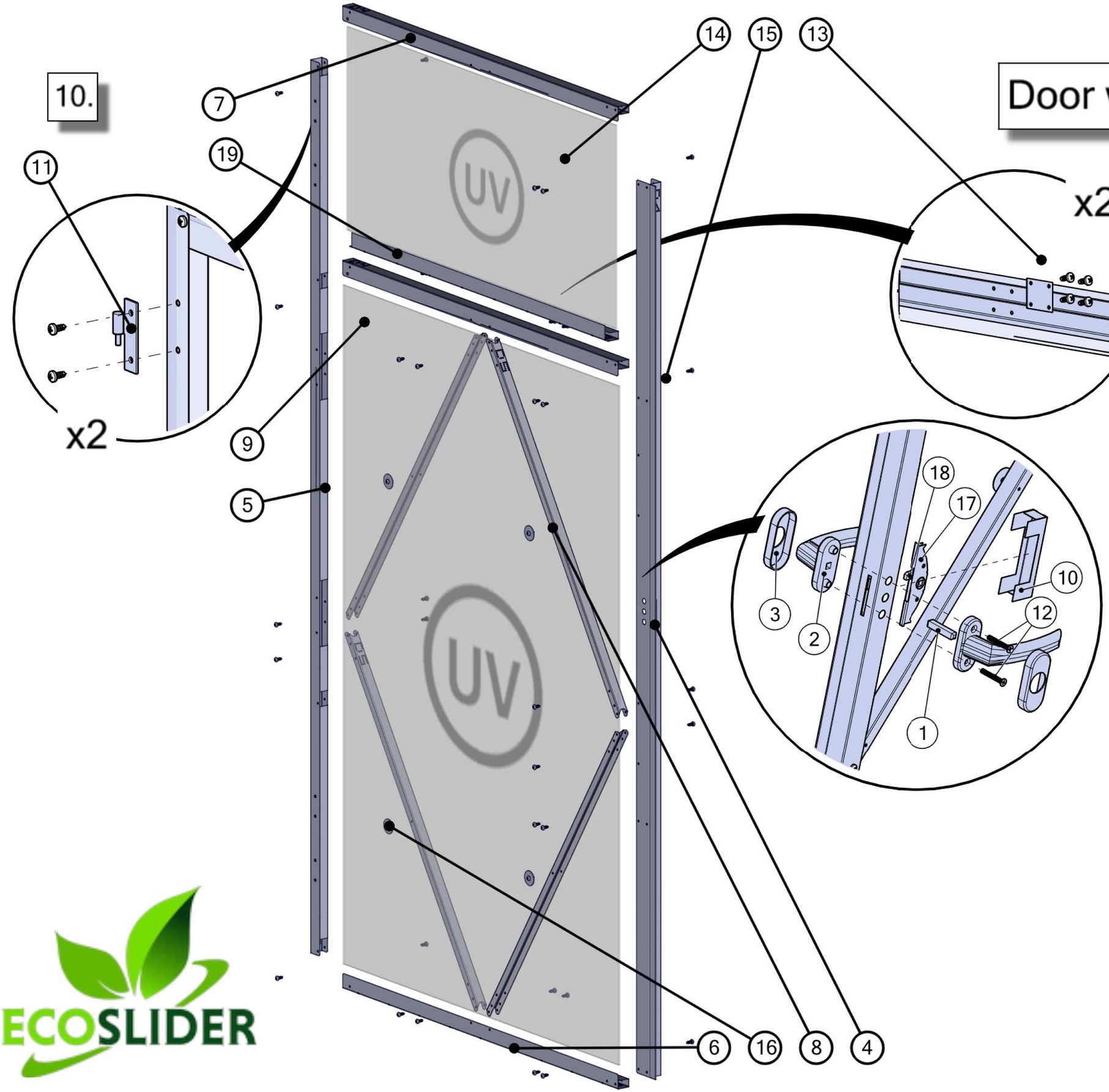

Description	BOM ID	Quantity
Hexagon	1	1
Handle	2	2
Handle cap	3	2
D1	4	1
D2	5	1
D3	6	1
D4	7	2
D5	8	4
Door polycarbonate	9	1
Lock cover	10	1
Door hinge	11	2
Lock screw	12	2
LDX overlay	13	2
Overdoor polycarbonate	14	1
Screw 4.2x16	15	57
Washer	16	4
Door lock	17	8
Lock tongue	18	1
FDX	19	1

ECOSLIDER

11.

Walls' installation

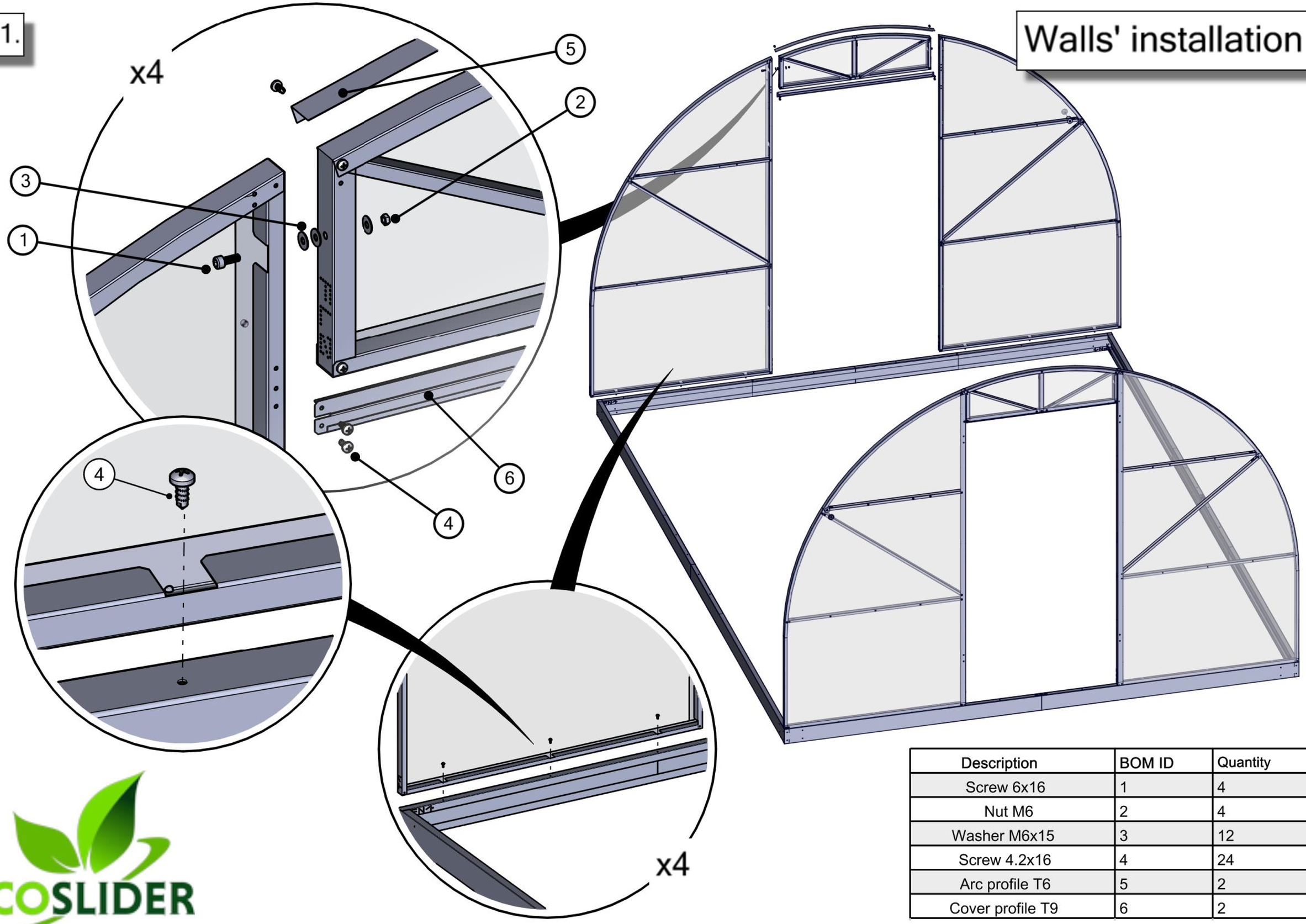

Description	BOM ID	Quantity
Screw 6x16	1	4
Nut M6	2	4
Washer M6x15	3	12
Screw 4.2x16	4	24
Arc profile T6	5	2
Cover profile T9	6	2

ECOSLIDER

12.

Trusses installation

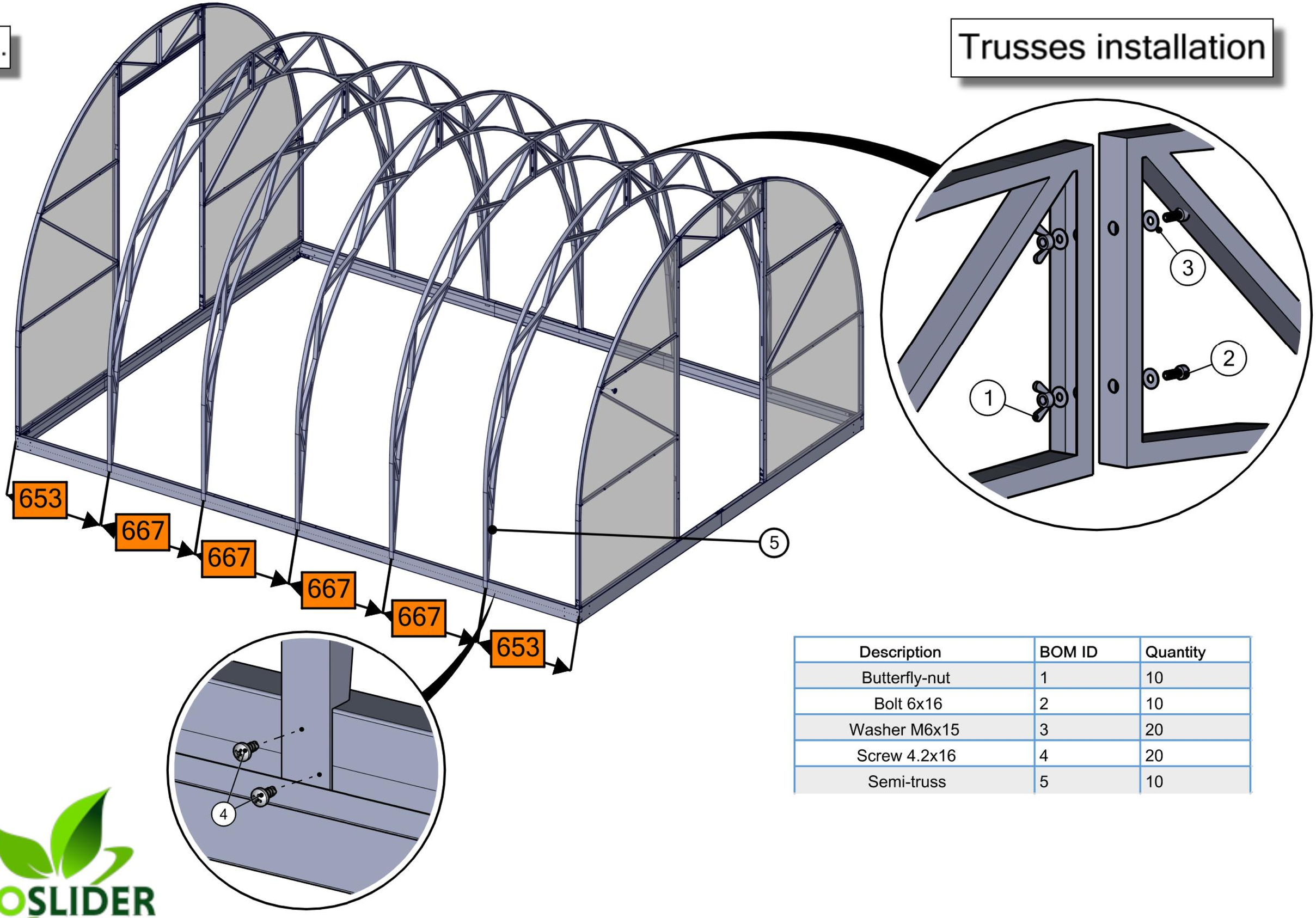

Description	BOM ID	Quantity
Butterfly-nut	1	10
Bolt 6x16	2	10
Washer M6x15	3	20
Screw 4.2x16	4	20
Semi-truss	5	10

ECOSLIDER

13.

Polycarbonate installation

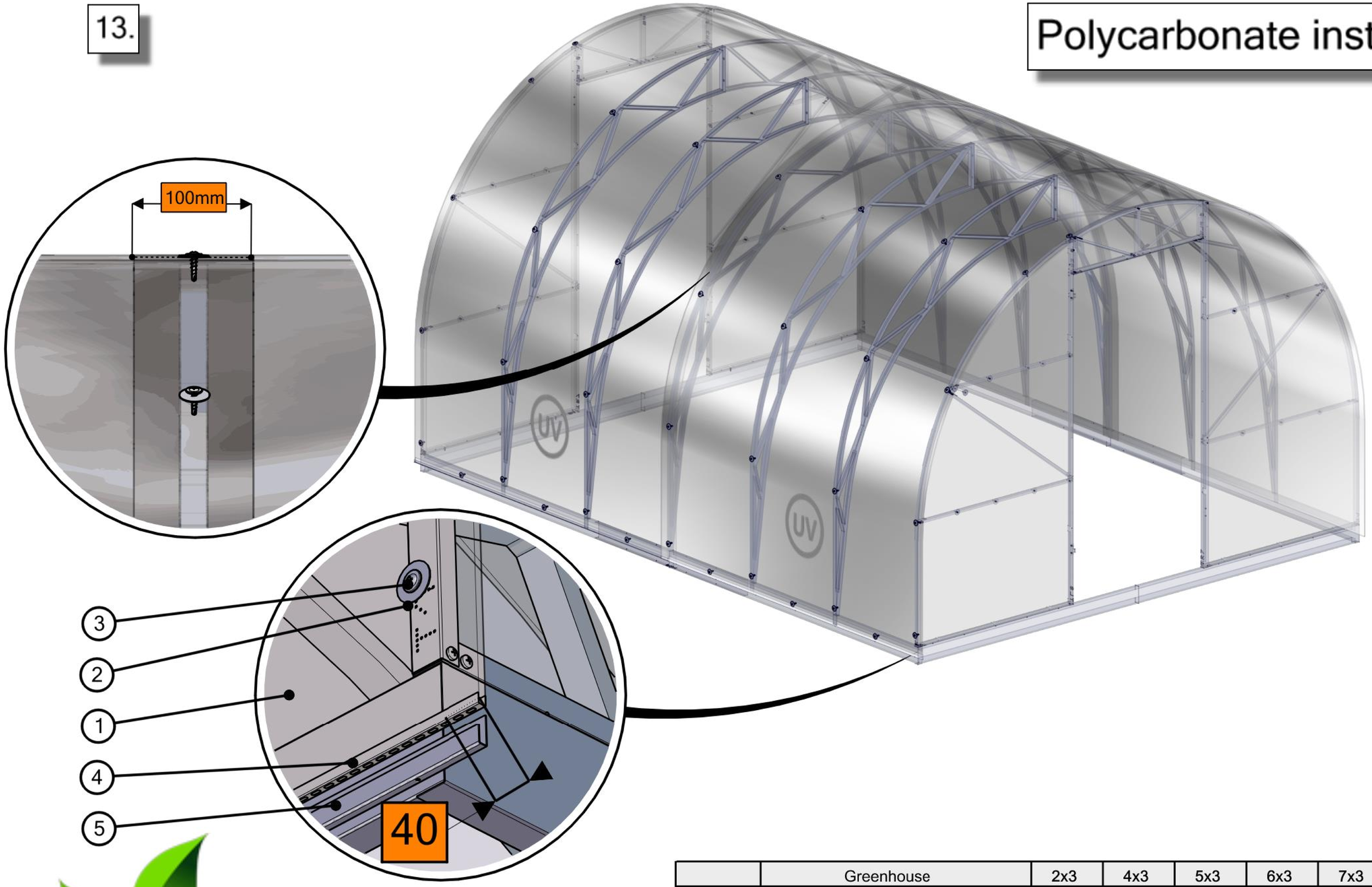

	Greenhouse	2x3	4x3	5x3	6x3	7x3	8x3	10x3
BOM ID	Description	Quantity	Quantity	Quantity	Quantity	Quantity	Quantity	Quantity
1	Polycarbonate sheet 6.0x2.1m	1	2	2.5	3	3.5	4	5
2	Screw 4.2x16	40	80	100	120	140	160	200
3	Washer M6x30	40	80	100	120	140	160	200
4	Anti-Dust Tape,m	4	8	10	12	14	16	20
5	U-profile 2.1m, pcs	2	4	5	6	7	8	10

ECOSLIDER

14.

Doors installation

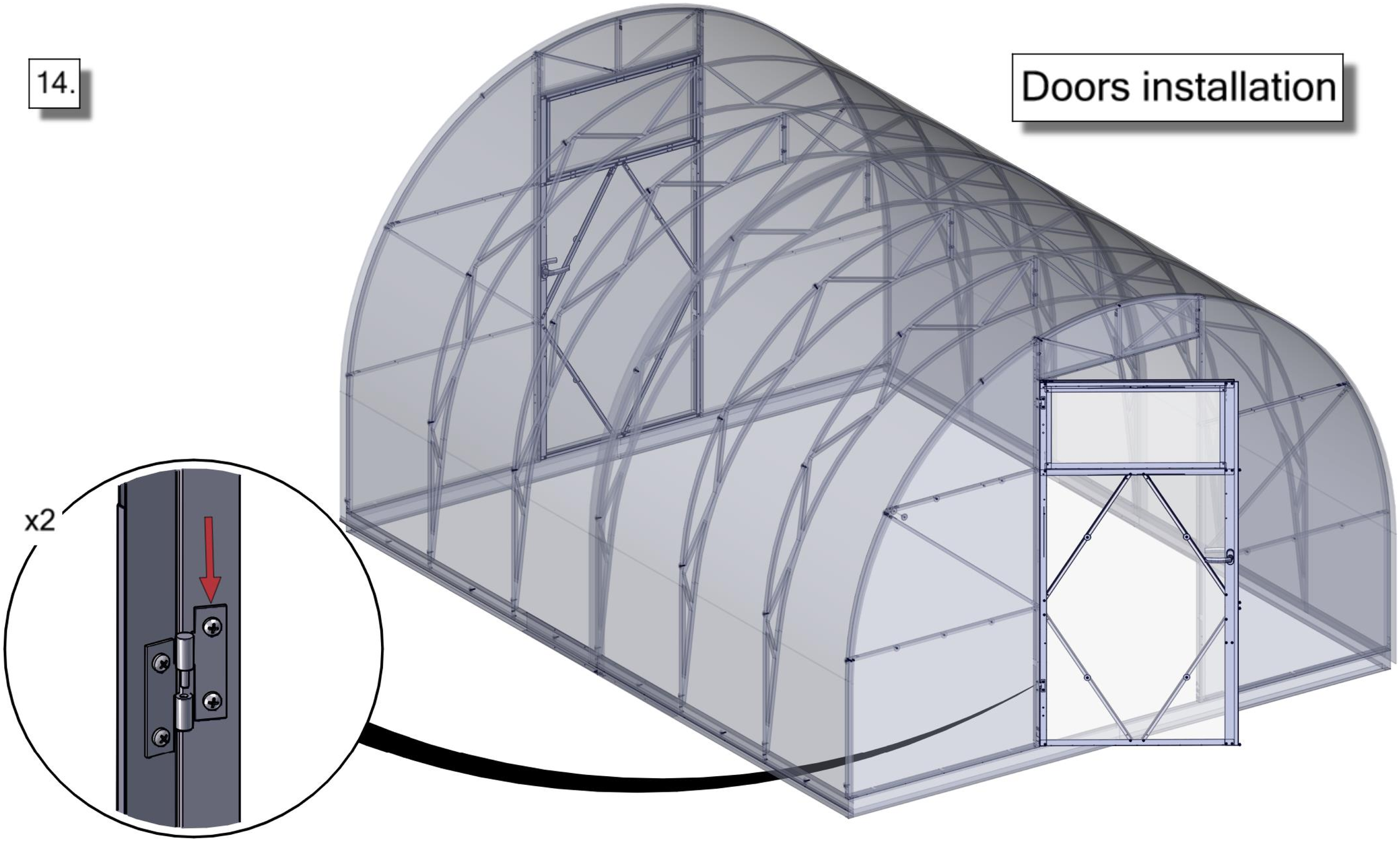

ECOSLIDER

15.

Smartventor's manual mechanism

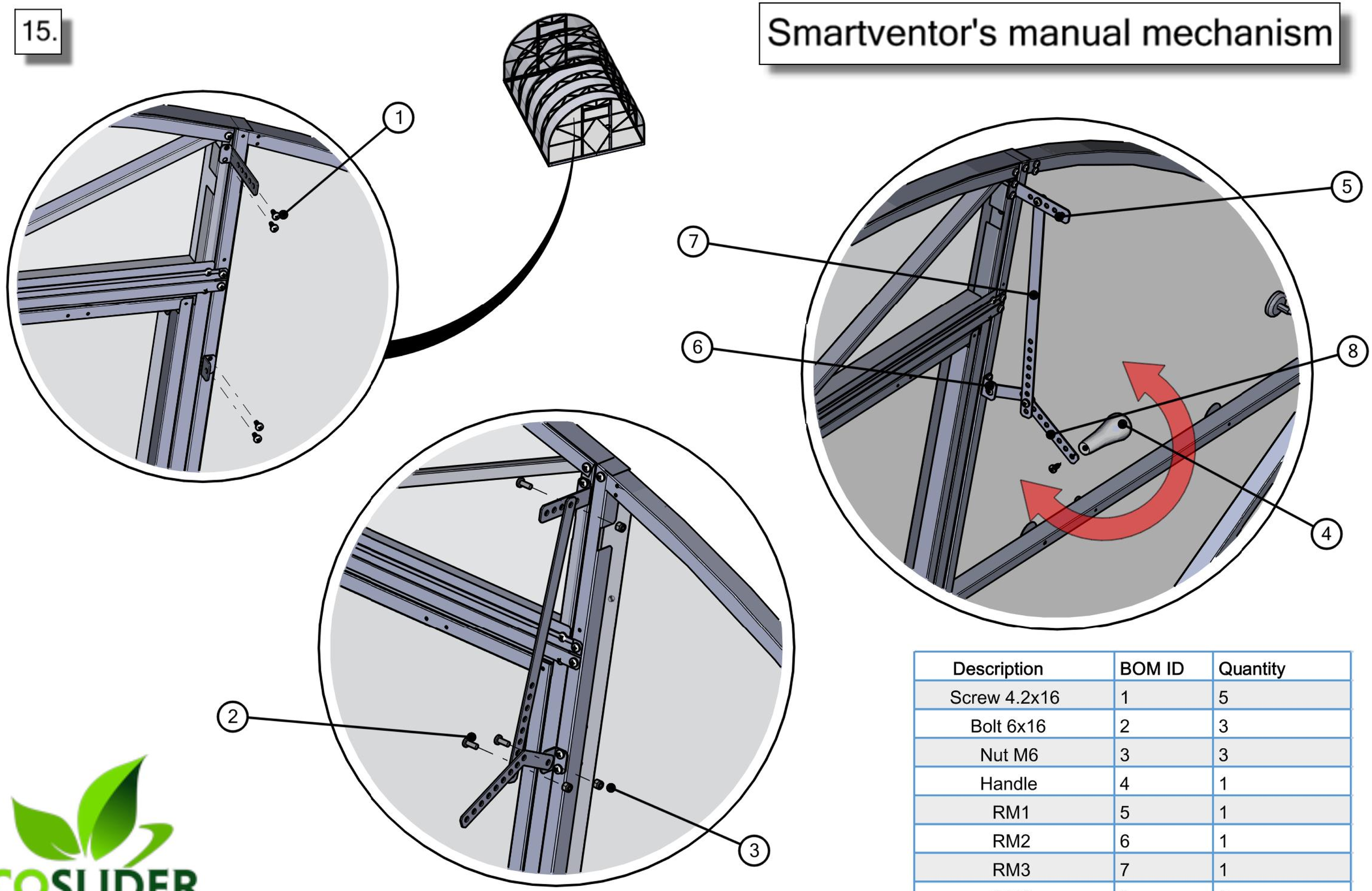

Description	BOM ID	Quantity
Screw 4.2x16	1	5
Bolt 6x16	2	3
Nut M6	3	3
Handle	4	1
RM1	5	1
RM2	6	1
RM3	7	1
RM4	8	1

ECOSLIDER

16.

Smartventor's automatic mechanism

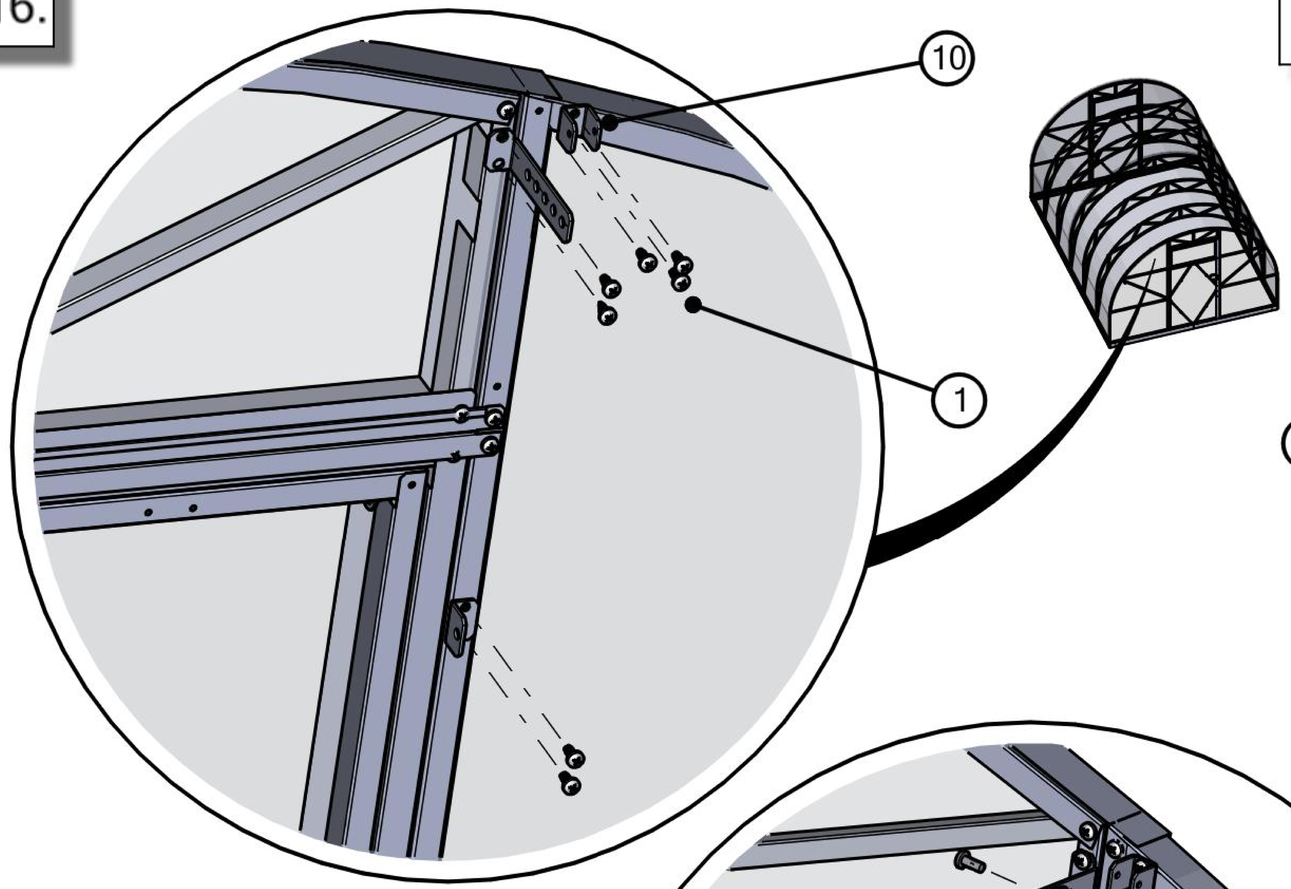

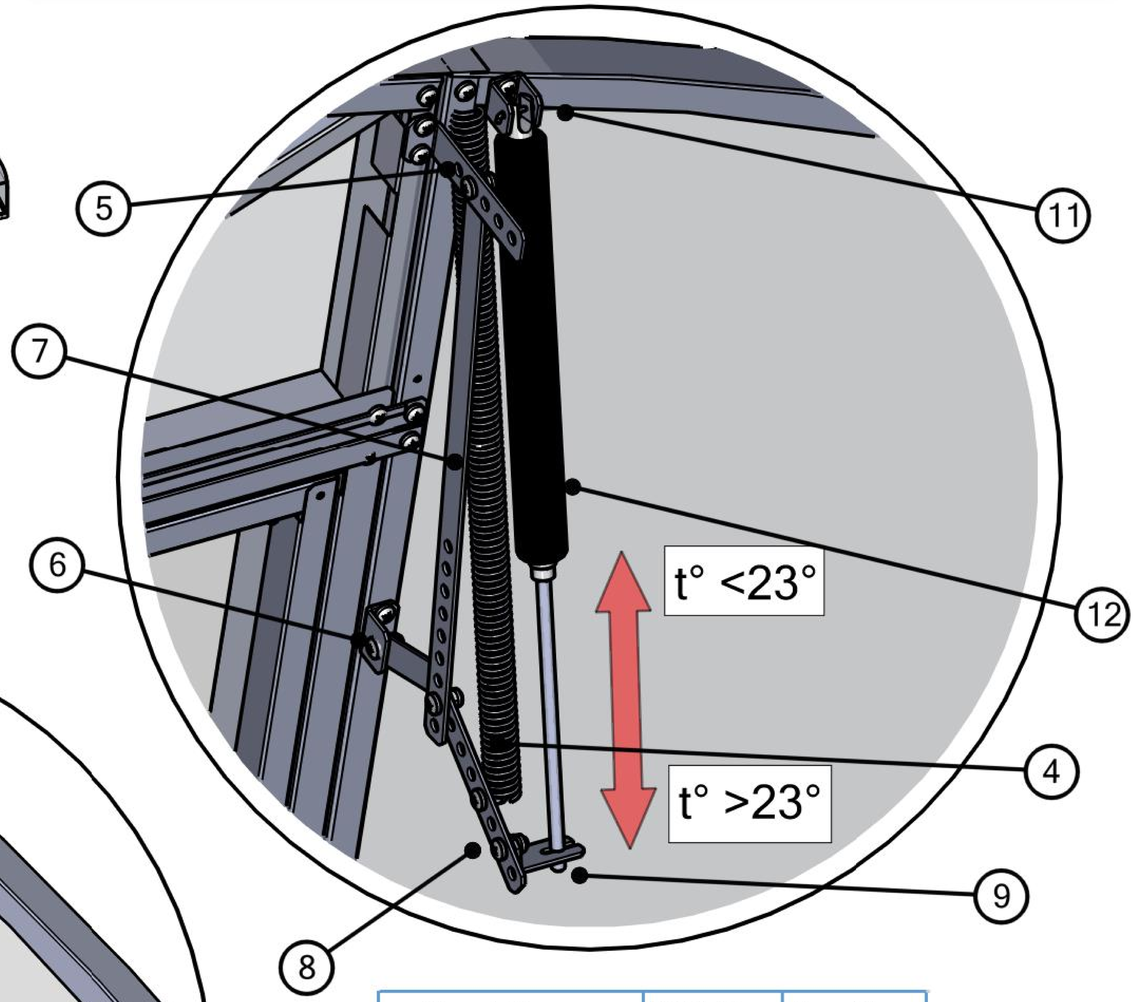

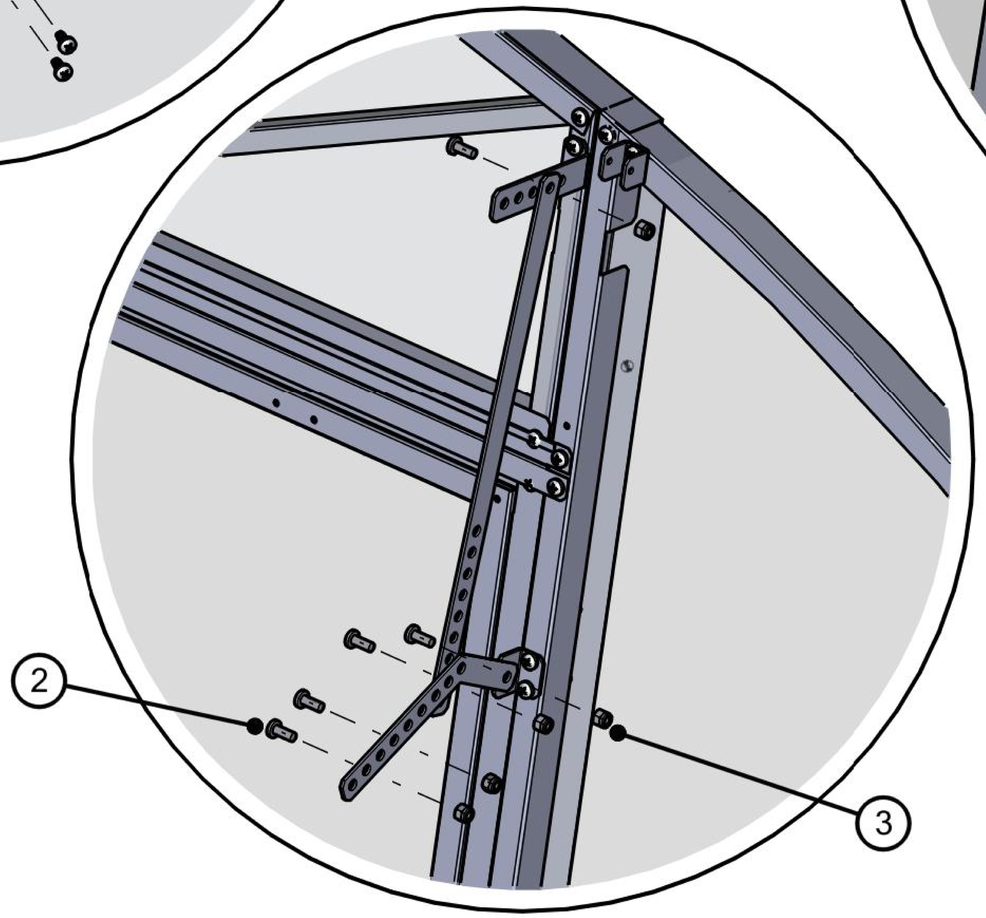

Description	BOM ID	Quantity
Screw 4.2x16	1	7
Bolt 6x16	2	5
Nut M6	3	5
Spring	4	1
RM1	5	1
RM2	6	1
RM3	7	1
RM4	8	1
RM5	9	1
RM5	10	1
Splint	11	1
Hydraulic cylinder	12	1

ECOSLIDER