1.

Mini-maksi greenhouse installation manual

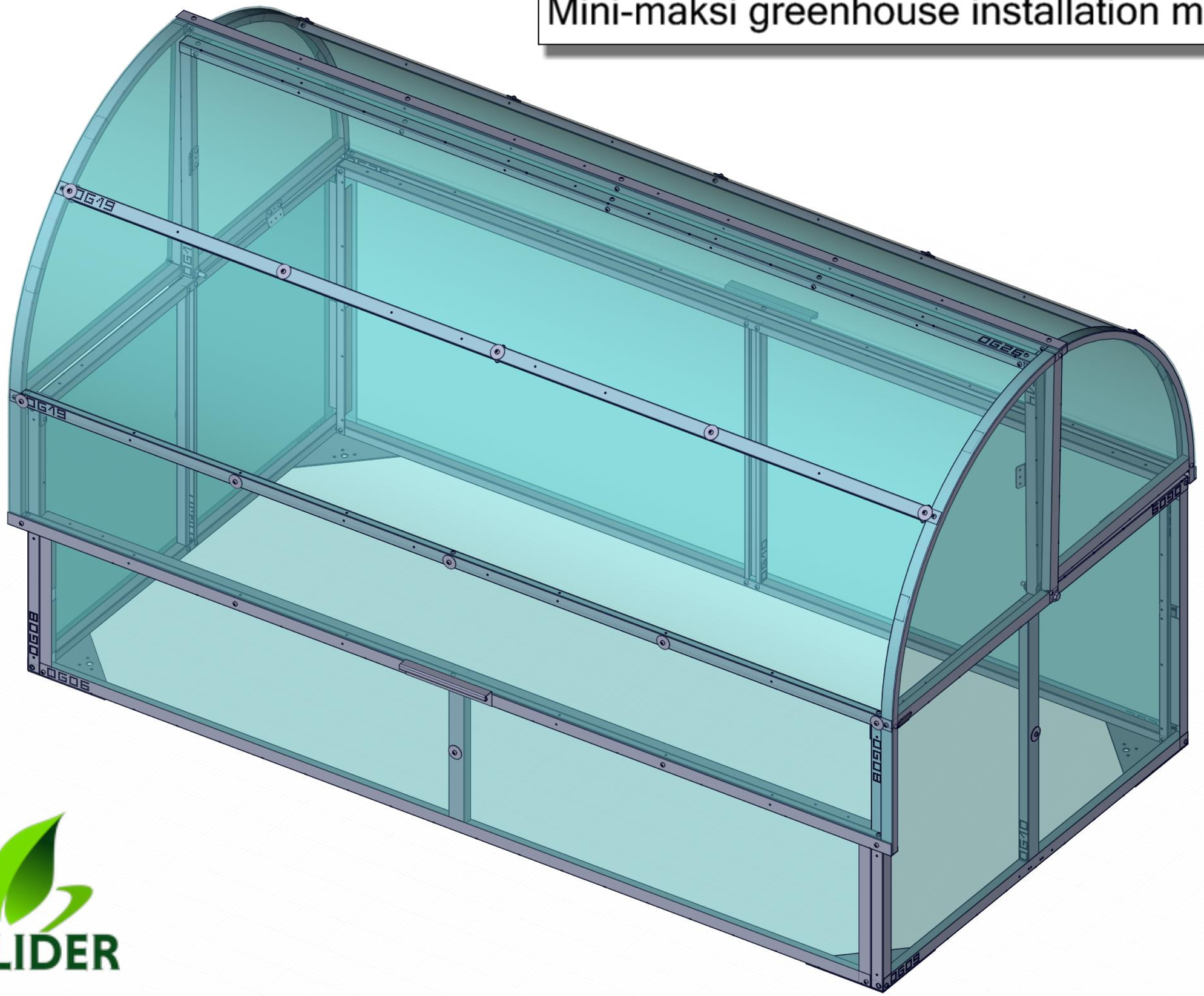

ECOSLIDER

2.

Preparation for work

Tools

Labelling

After assembling turn upside down

Uv — This is the UV-protected side of polycarbonate. Remove the films from both sides immediately before installation.

vU — This is the nonUV-protected side of polycarbonate. Only for using insight of greenhouse

Kit

Detail	Description	Quantity
Base	OG07	2
	OG11	1
	OG06	2
	OG08	2
	OG10	1
	OG06	2
	OG08	4
	OG10	2
	OG09	4
	OG16	2
	OG04L	1
	OG04R	1
	OG03	4
Inner walls	OG13	2
	OG14	2
	OG18	2
	OG02	4
Outer walls	OG15	2
	OG17	2
	OG12	2

Detail	Description	Quantity
Metalware and polycarbonate	Screw 4.2x16	232
	Spacer	8
	Washer 5x30	18
	Bolt M8x80	2
	Washer M8x30	8
	Nut M8	2
	Polycarbonate 1940x362	1
	Polycarbonate 1940x617	1
	Polycarbonate 1046x617	2
	Polycarbonate 535x535	2
	Polycarbonate 582x567	2
	Polycarbonate 2001x887	1
	Polycarbonate 2064x965	1
Inner part	OG20	3
	OG25	3
	OG22	1
	OG23	1
	OG26	1
Outer part	OG24	4
	OG19	4
	OG21	2
	OG23	1

ECOSLIDER

3.

Kit

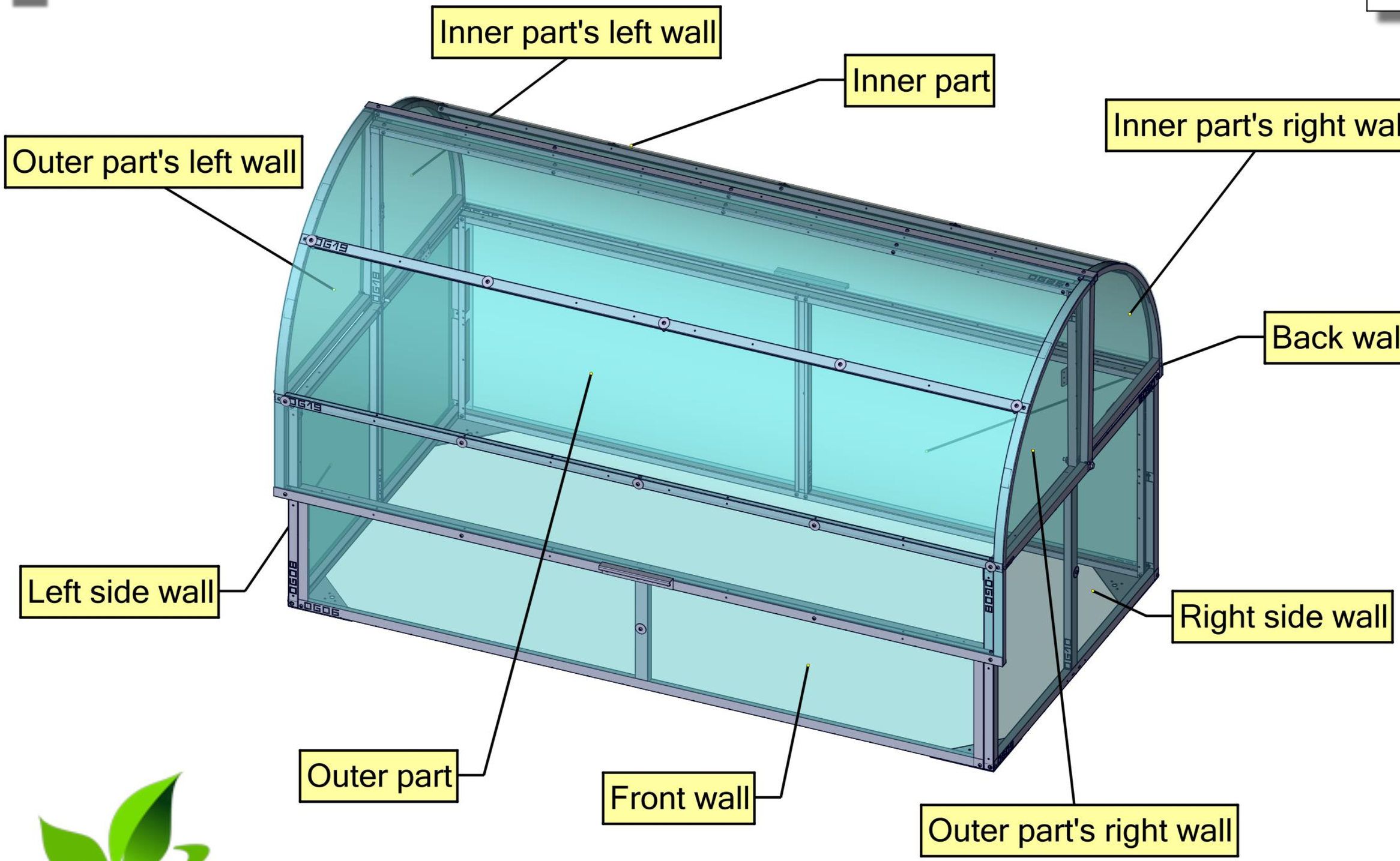

ECOSLIDER

4.

Front wall assembling

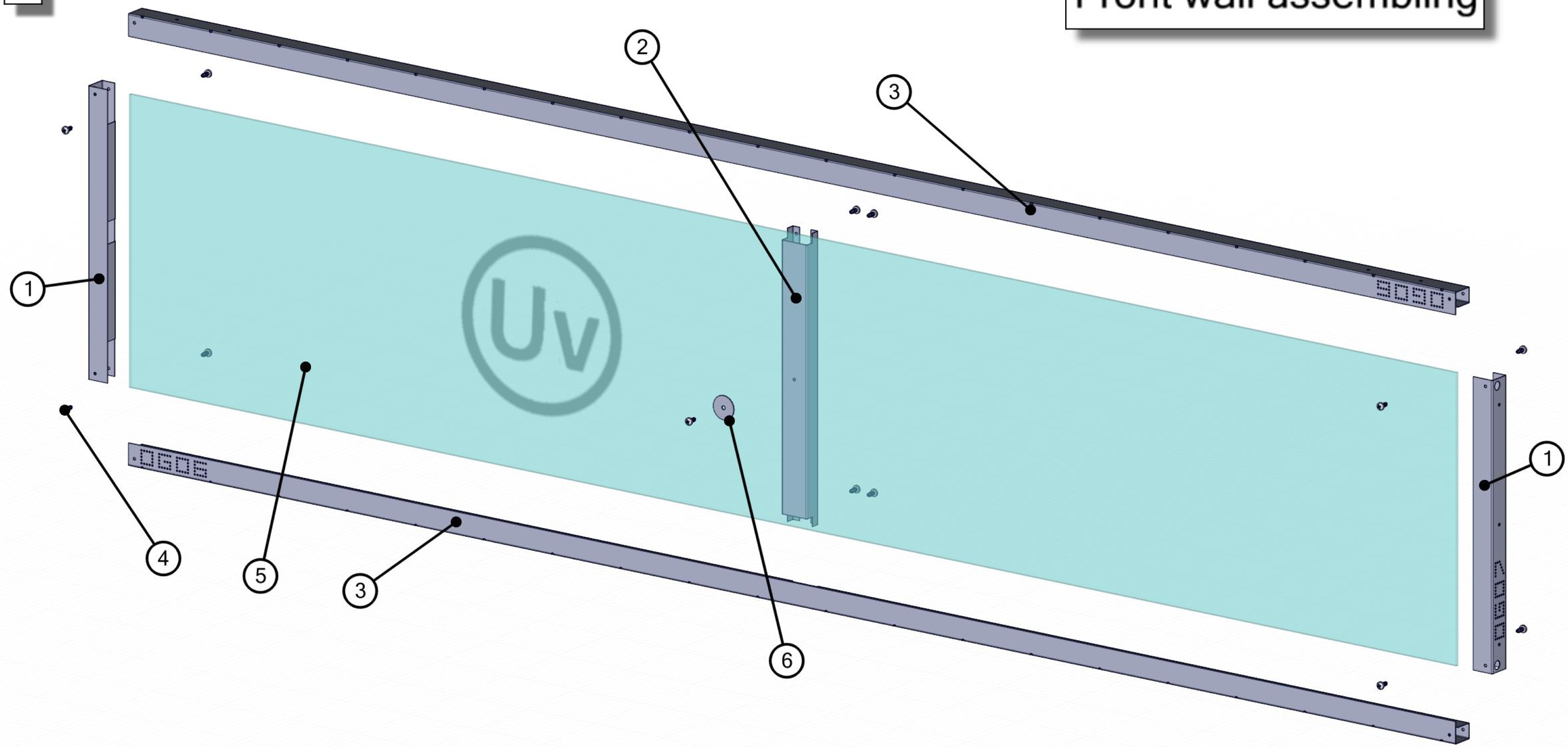

Description	BOM ID	Quantity
OG07	1	2
OG11	2	1
OG06	3	2
Screw 4.2x16	4	13
Polycarbonate 1940x362	5	1
Washer 5x30	6	1

ECOSLIDER

5.

Back wall assembling

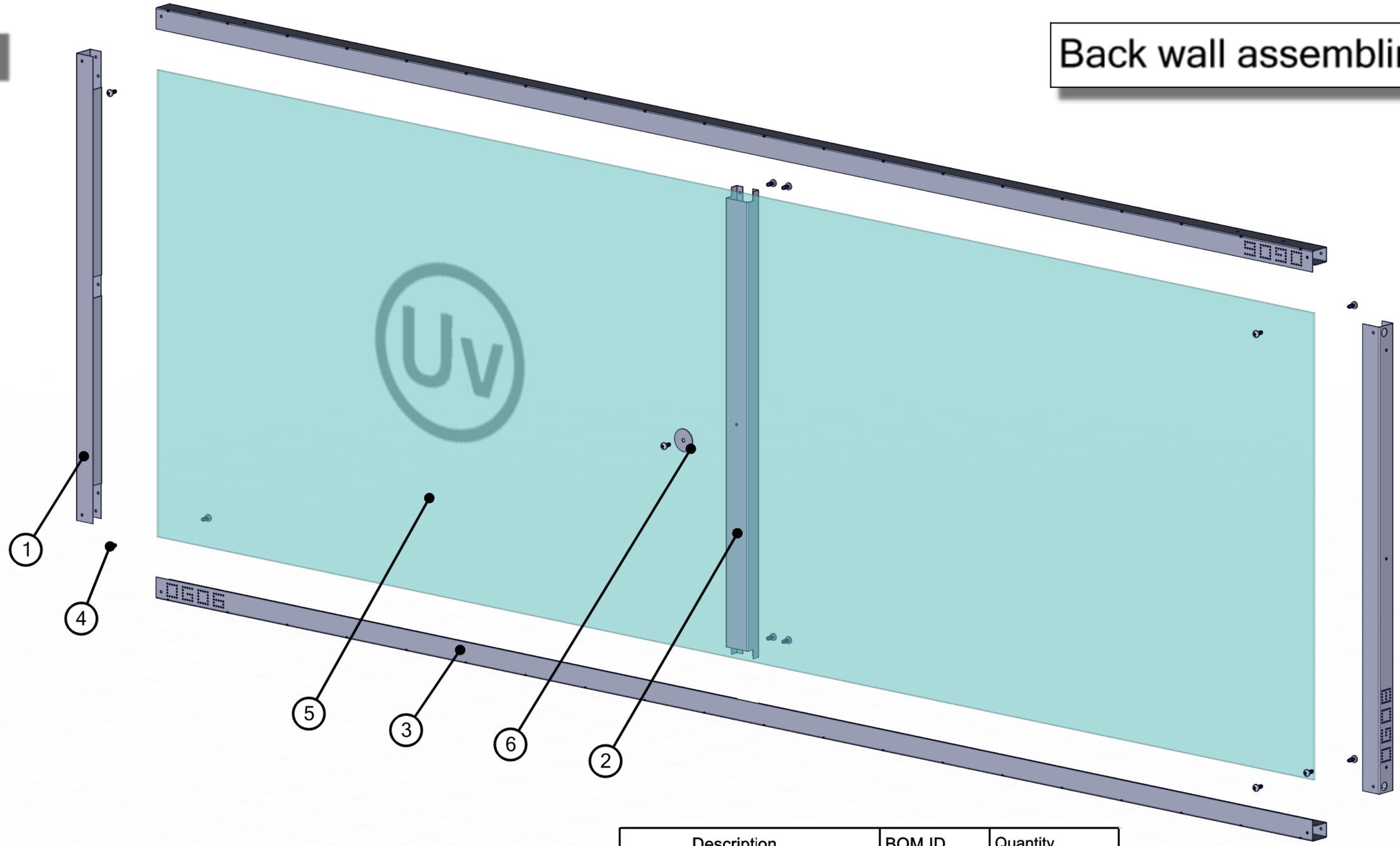

Description	BOM ID	Quantity
OG08	1	2
OG10	2	1
OG06	3	2
Screw 4.2x16	4	13
Polycarbonate 1940x617	5	1
Washer 5x30	6	1

ECOSLIDER

6.

Side walls assembling

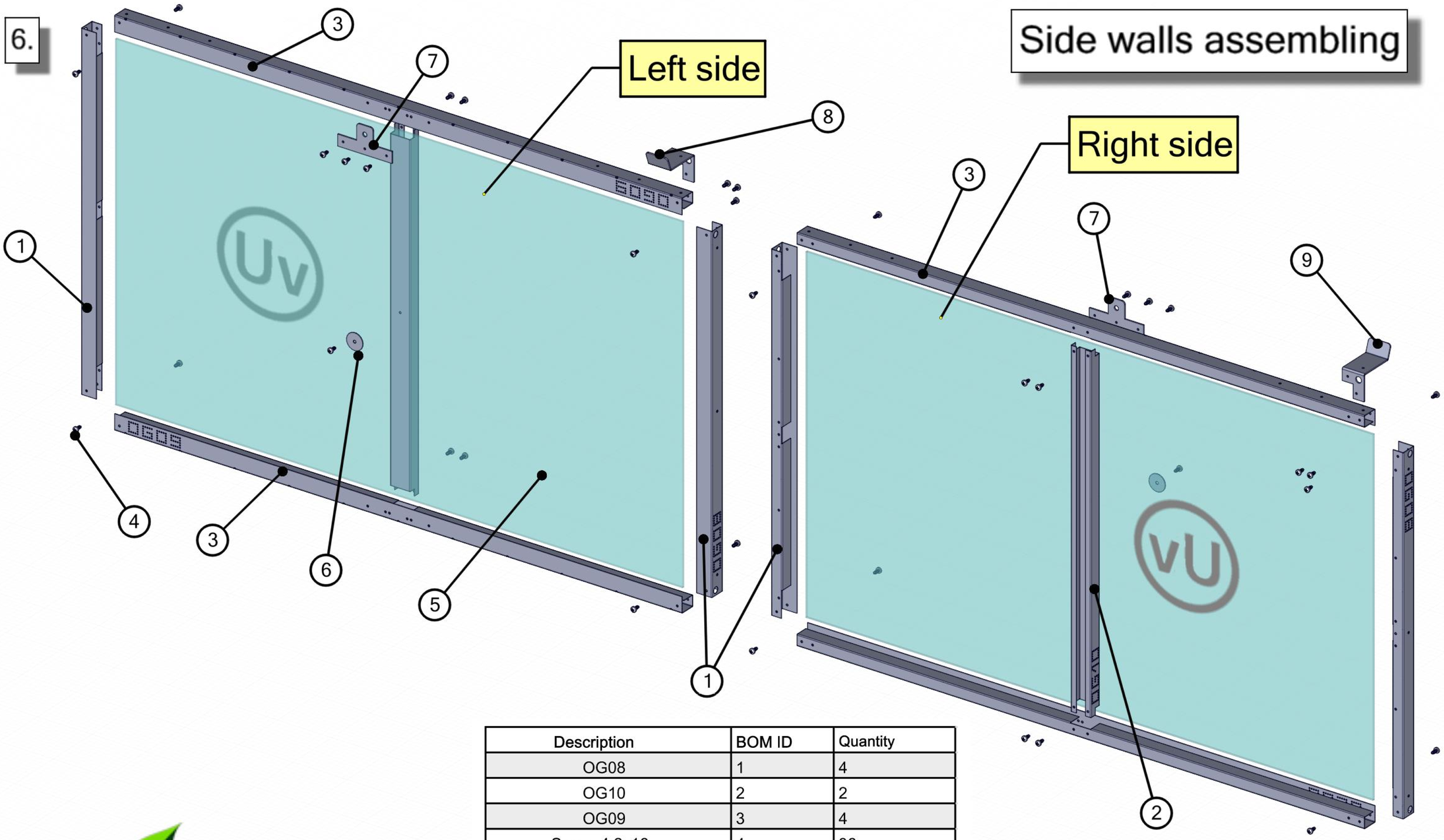

Description	BOM ID	Quantity
OG08	1	4
OG10	2	2
OG09	3	4
Screw 4.2x16	4	36
Polycarbonate 1046x617	5	1
Washer 5x30	6	1
OG16	7	2
OG04L	8	1
OG04R	9	1

ECOSLIDER

7.

Base assembly

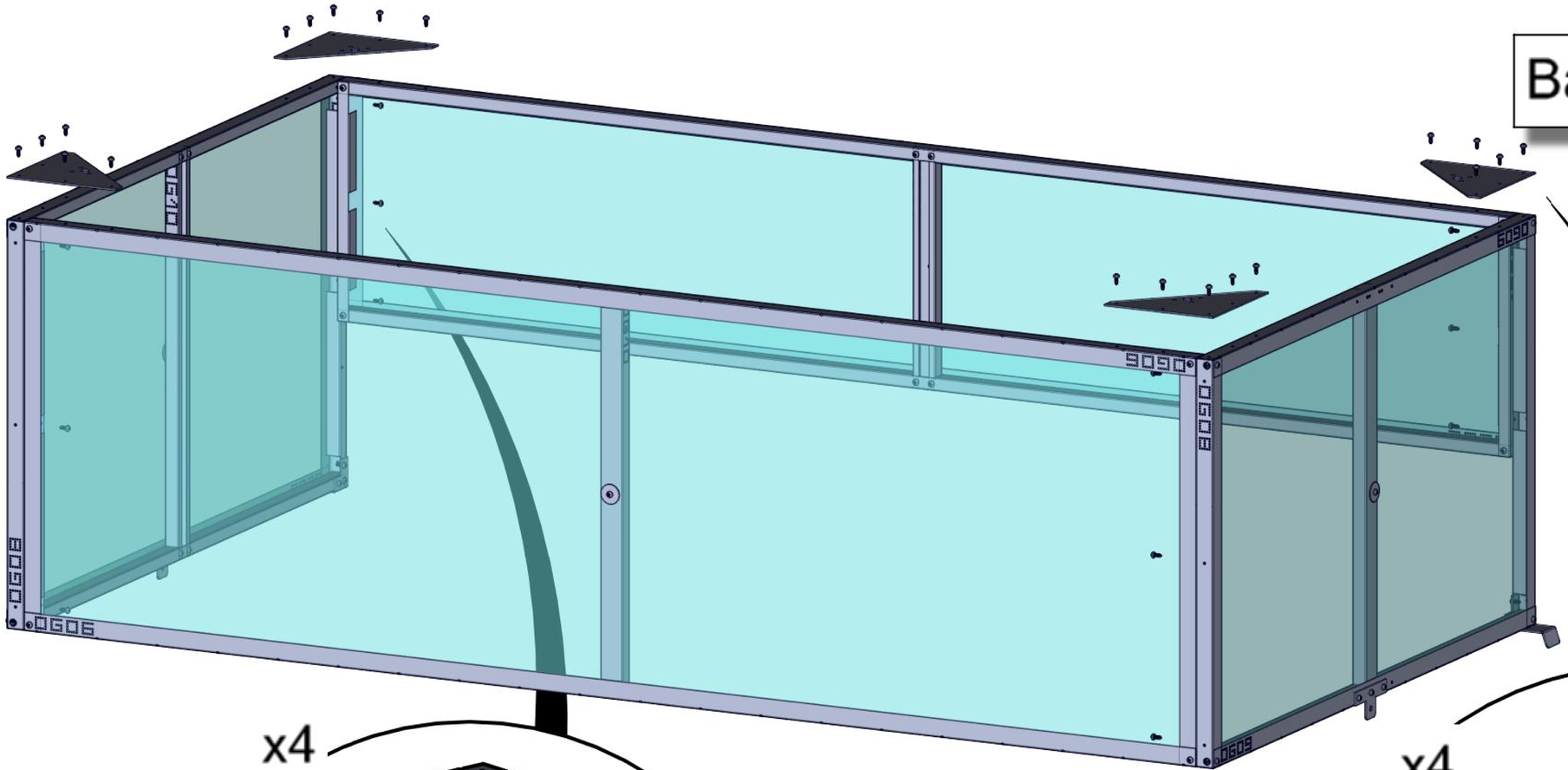

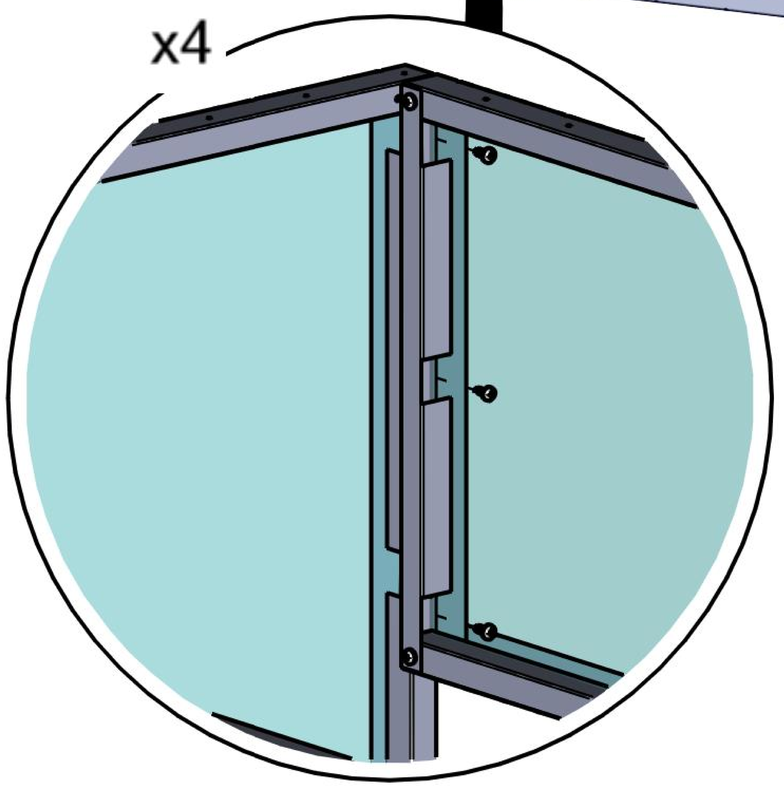

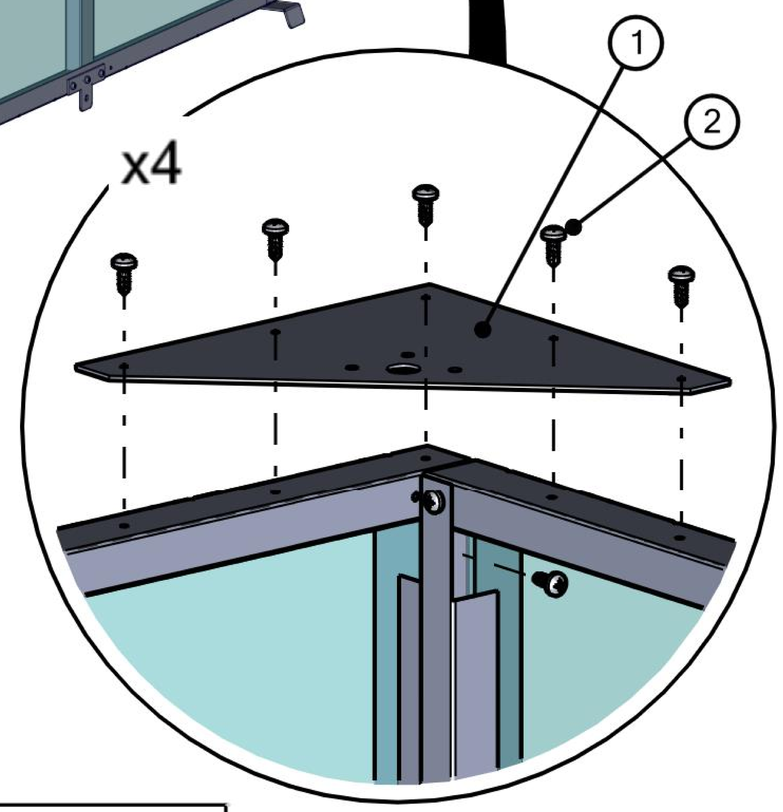

Description	BOM ID	Quantity
OG03	1	4
Screw 4.2x16	2	32

ECOSLIDER

8.

Inner walls assembly

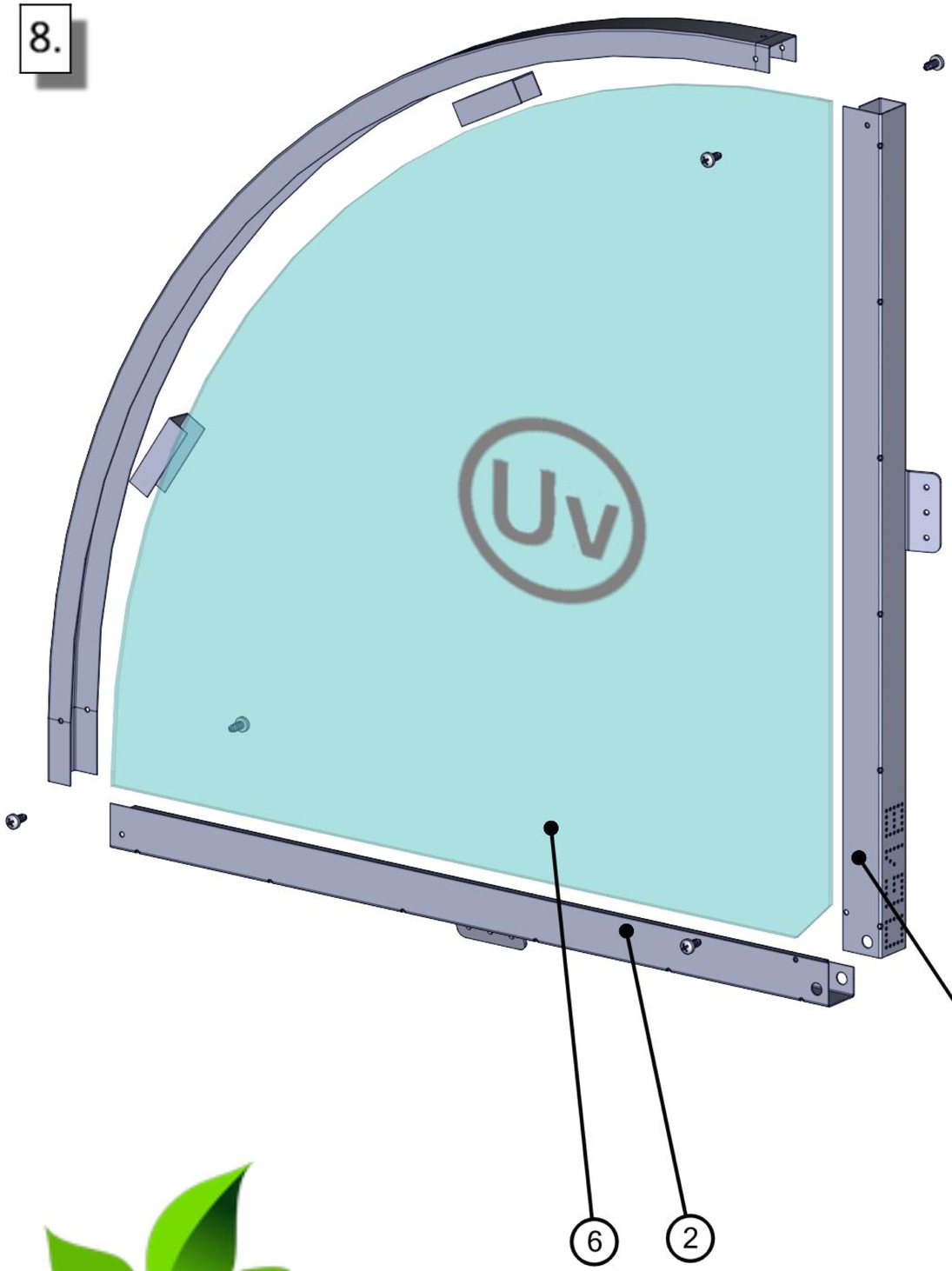

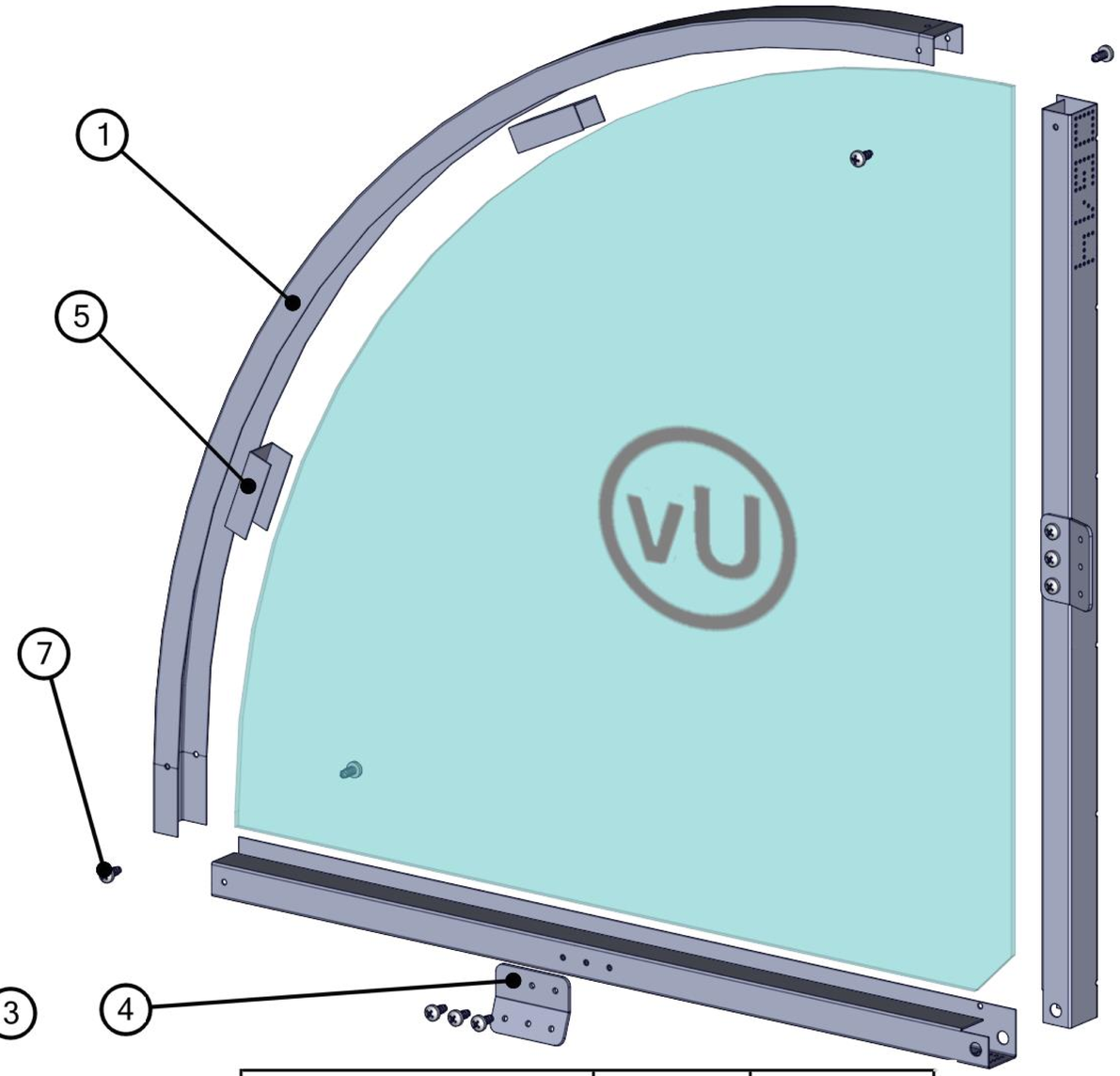

Description	BOM ID	Quantity
OG13	1	2
OG14	2	2
OG18	3	2
OG02	4	4
Spacer	5	4
Polycarbonate 535x535	6	2
Screw 4.2x16	7	22

ECOSLIDER

9.

Outer walls assembly

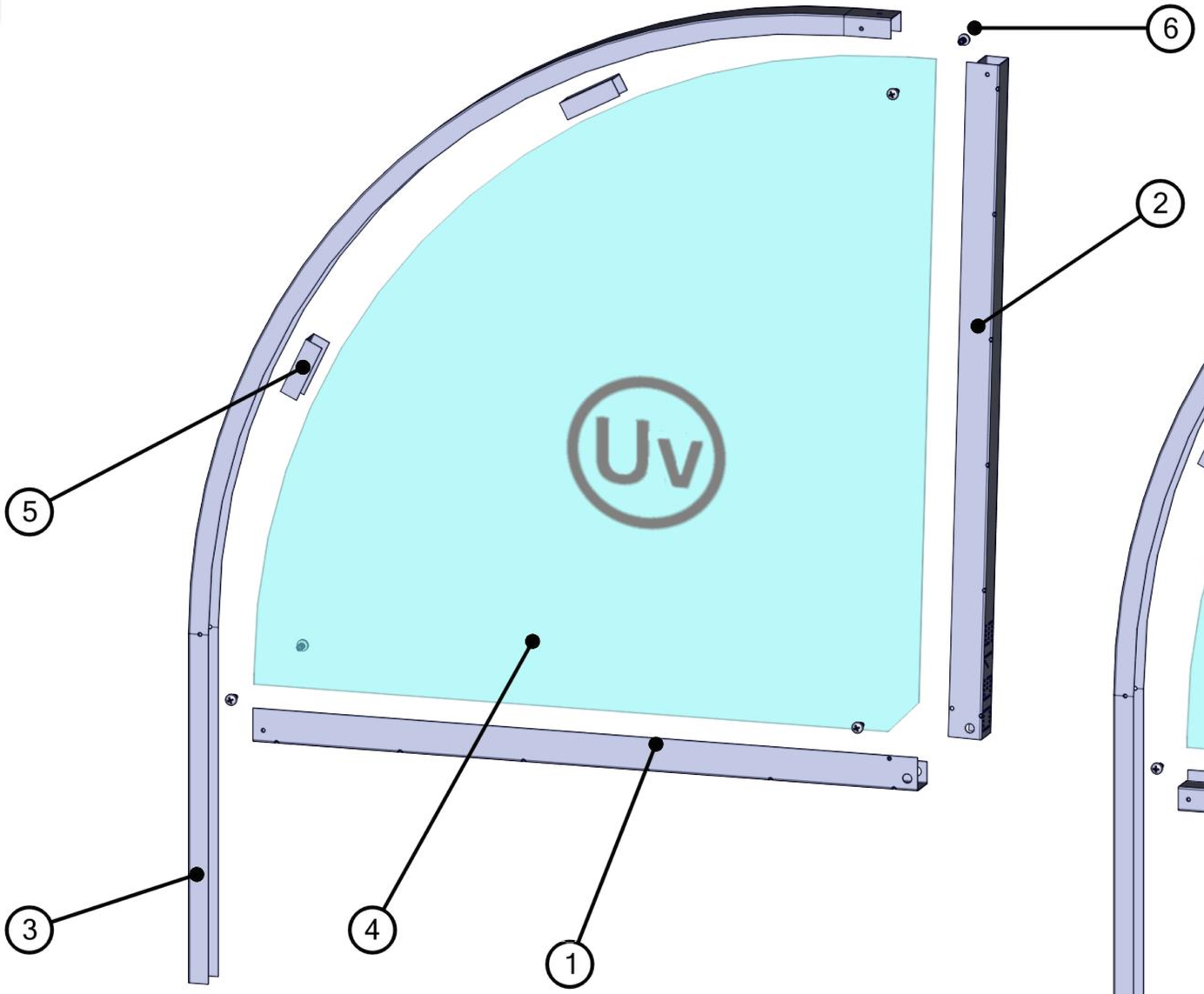

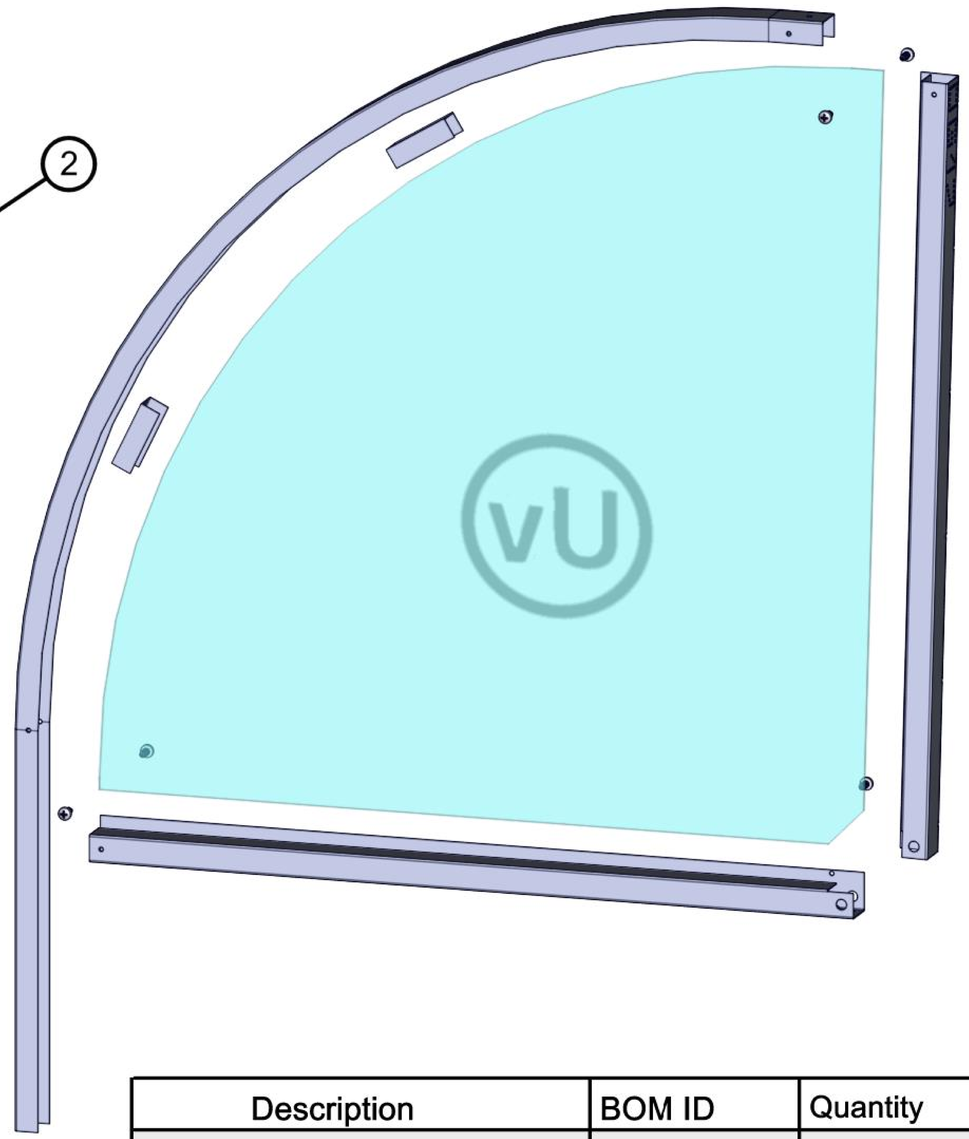

Description	BOM ID	Quantity
OG15	1	2
OG17	2	2
OG12	3	2
Polycarbonate 582x567	4	2
Spacer	5	4
Screw 4.2x16	6	10

ECOSLIDER

10.

Inner part's assembly 1

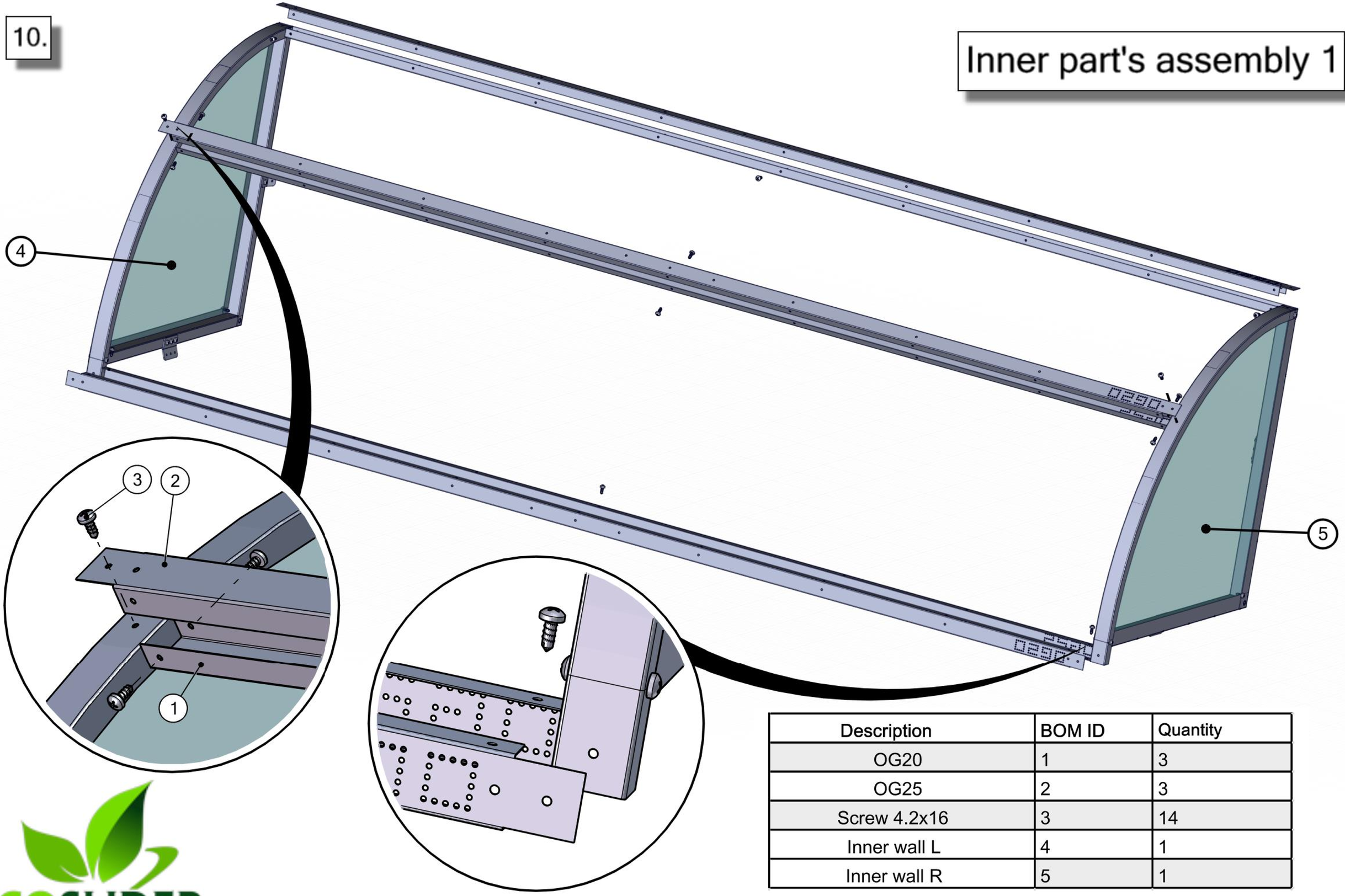

Description	BOM ID	Quantity
OG20	1	3
OG25	2	3
Screw 4.2x16	3	14
Inner wall L	4	1
Inner wall R	5	1

ECOSLIDER

11.

Inner part's assembly 2

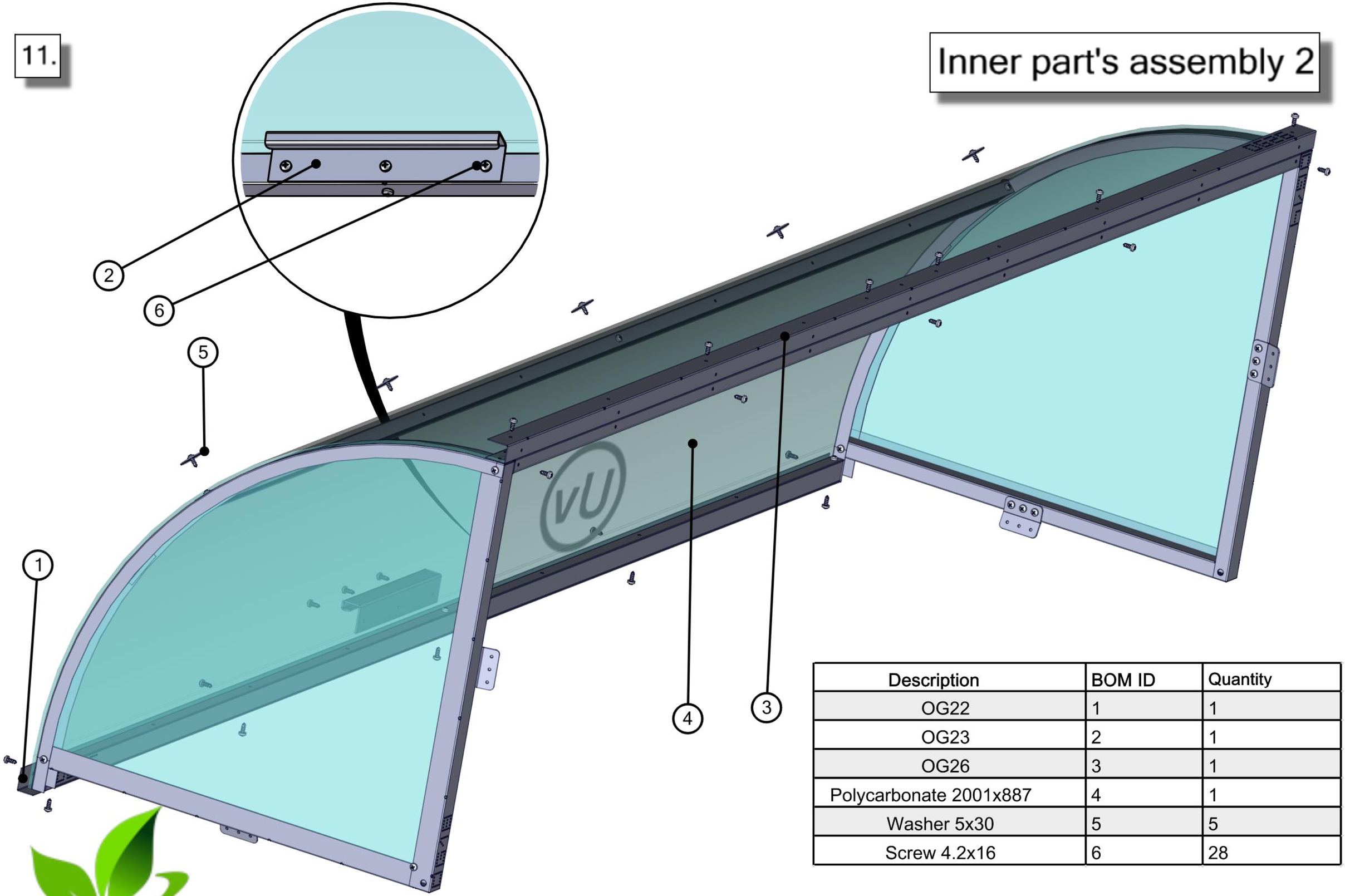

Description	BOM ID	Quantity
OG22	1	1
OG23	2	1
OG26	3	1
Polycarbonate 2001x887	4	1
Washer 5x30	5	5
Screw 4.2x16	6	28

ECOSLIDER

12.

Outer part's assembly 1

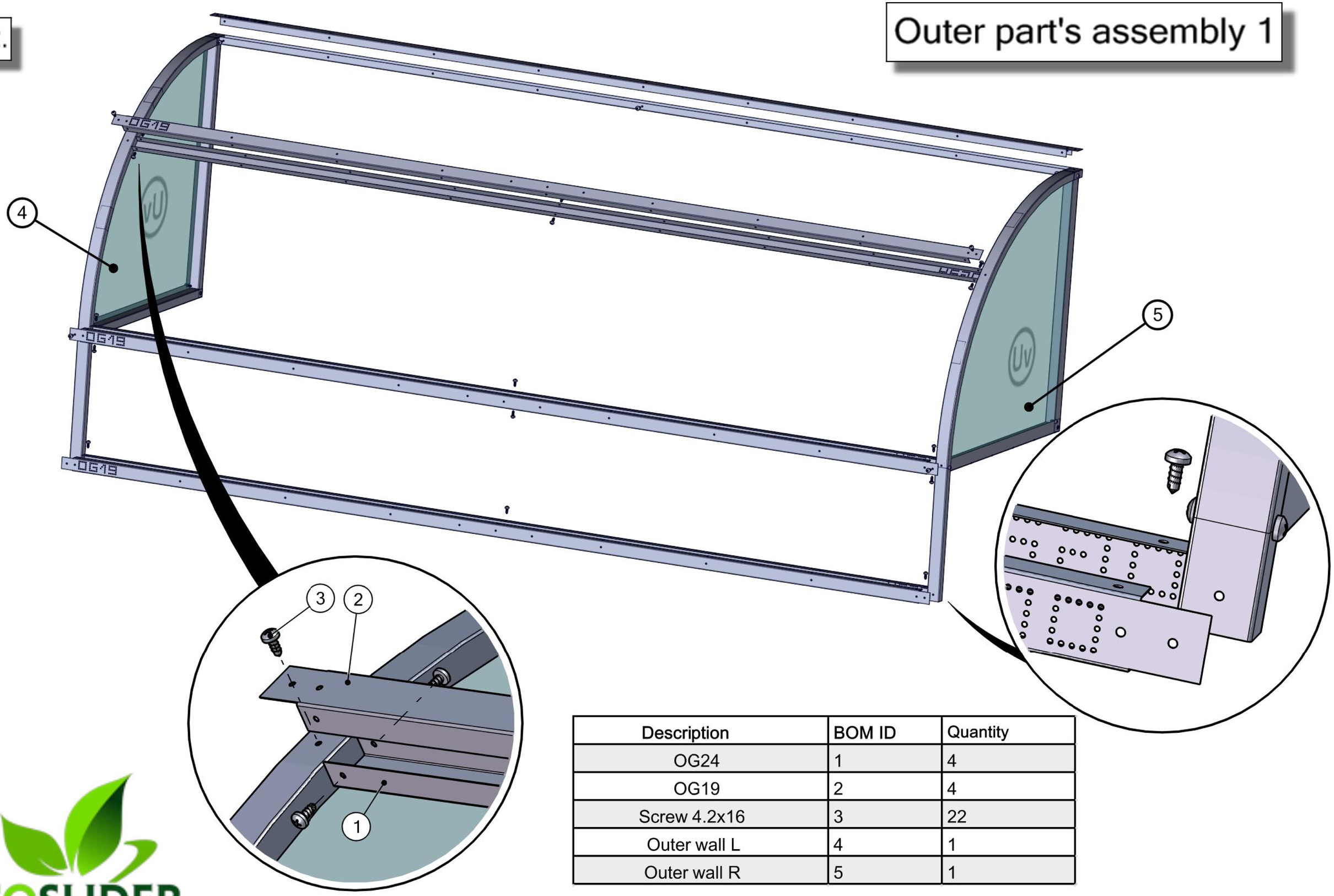

Description	BOM ID	Quantity
OG24	1	4
OG19	2	4
Screw 4.2x16	3	22
Outer wall L	4	1
Outer wall R	5	1

ECOSLIDER

13.

Outer part's assembly 2

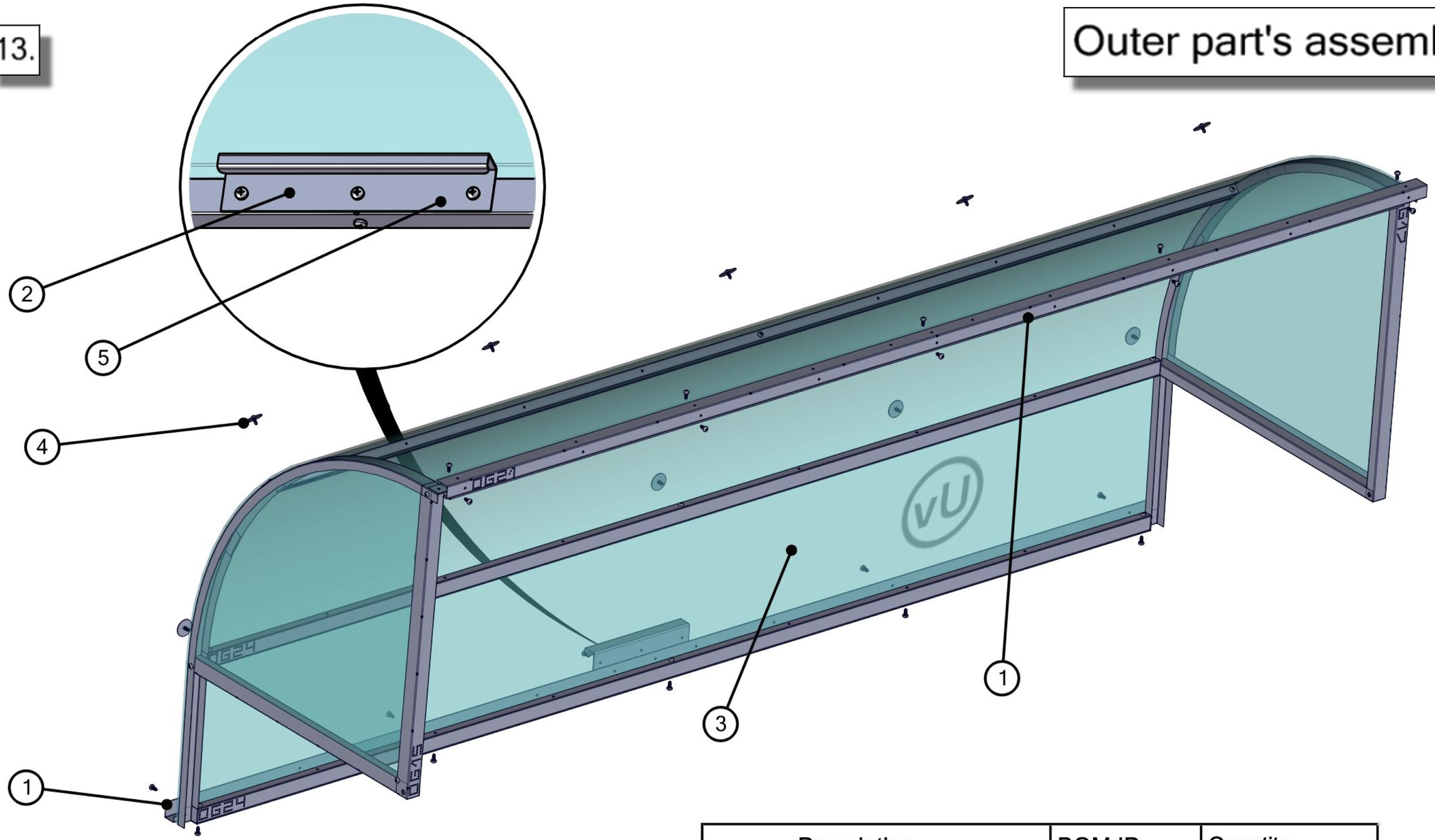

Description	BOM ID	Quantity
OG21	1	2
OG23	2	1
Polycarbonate 2064x965	3	1
Washer 5x30	4	10
Screw 4.2x16	5	42

ECOSLIDER

14.

Final assembly

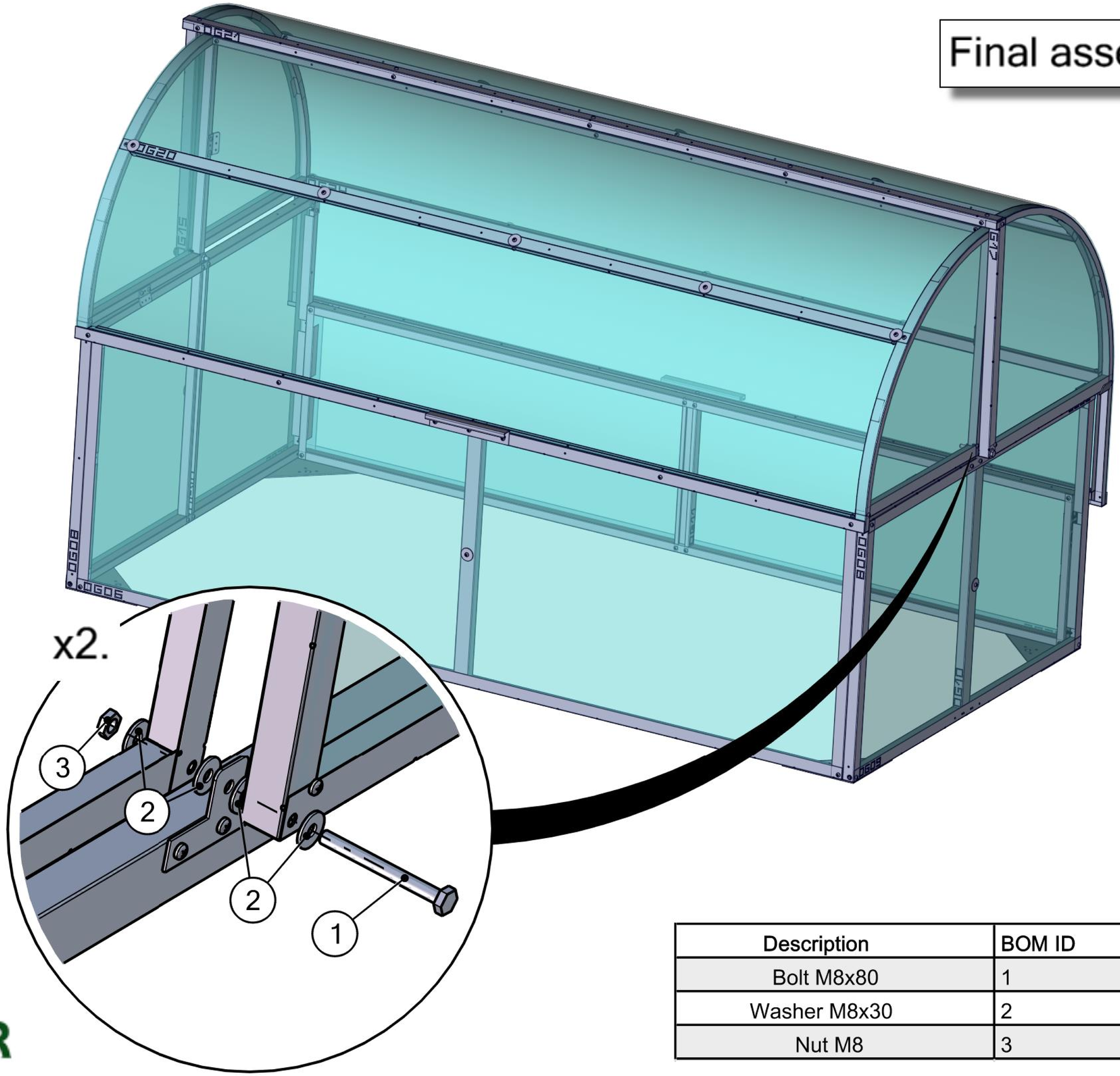

Description	BOM ID	Quantity
Bolt M8x80	1	2
Washer M8x30	2	8
Nut M8	3	2

ECOSLIDER