Mini-mini greenhouse installation manual

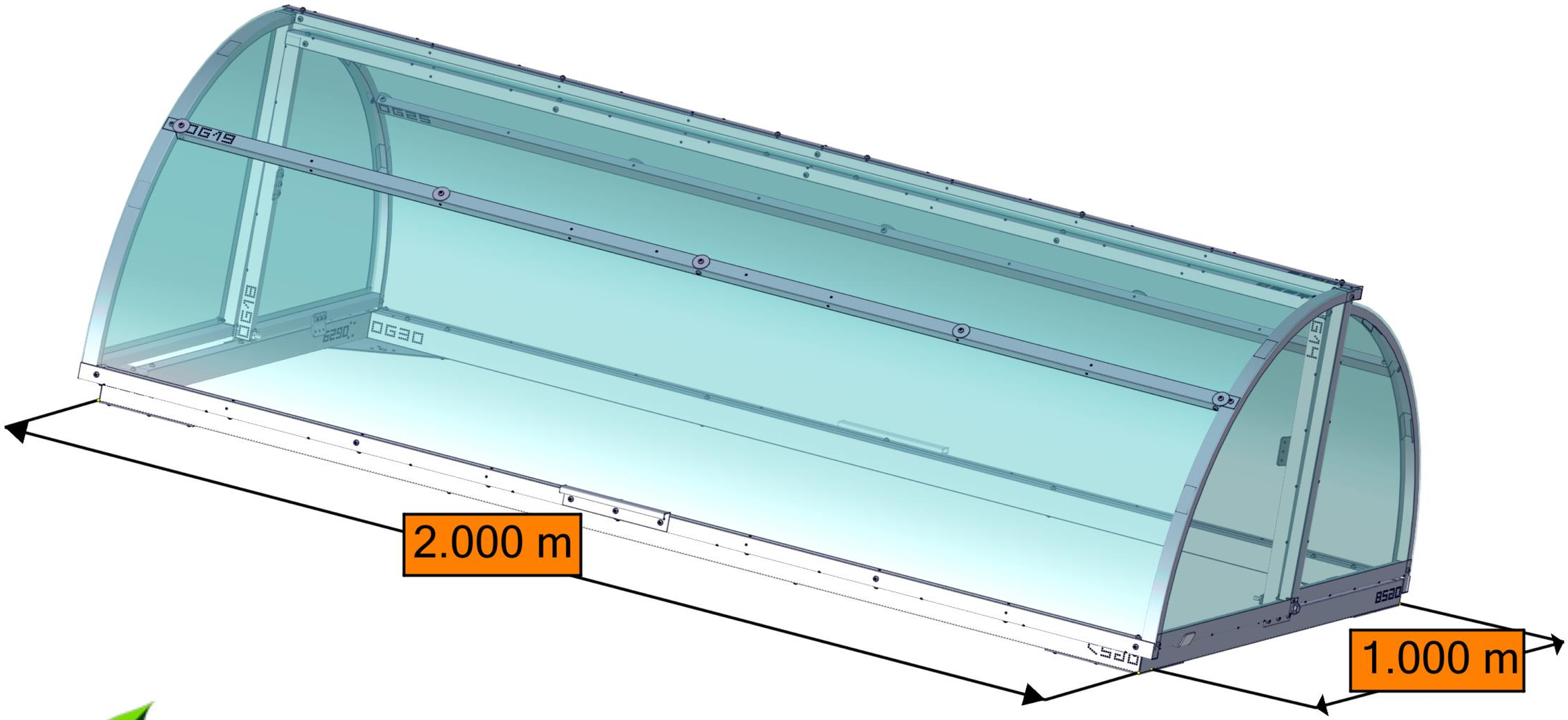

ECOSLIDER

2.

Preparation for work

Tools

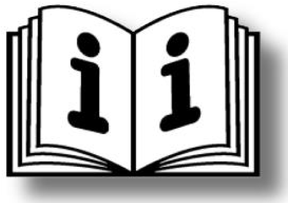

Labelling

After assembling turn upside down

UV

This is the UV-protected side of polycarbonate. Remove the films from both sides immediately before installation.

VU

This is the nonUV-protected side of polycarbonate. Only for using insight of greenhouse

Kit

Detail	Description	Quantity
Inner walls, page 5	OG13	2
	OG14	2
	OG18	2
	OG02	4
Inner part, pages 7,8	OG20	3
	OG25	3
	OG22	1
	OG23	2
	OG26	3
Outer walls, page 6	OG15	2
	OG17	2
	OG31	2
Outer part, pages 9,10	OG19	3
	OG24	3
	OG21	2
	OG23	1

Detail	Description	Quantity
Base, pages 3,4	OG27	2
	OG28	2
	OG29	2
	OG30	2
	OG03	4
	OG04L	1
	OG04R	1
	OG16	2
	Steel bar	4
Metalware and polycarbonate	Screw 4.2x16	140
	Spacer	8
	Washer M5x30	10
	Bolt M8x80	2
	Washer M8x30	8
	Nut M8	2
	Polycarbonate 535x535	2
	Polycarbonate 582x567	2
	Polycarbonate 2001x887	1
	Polycarbonate 2064x965	1

ECOSLIDER

3.

Base 1

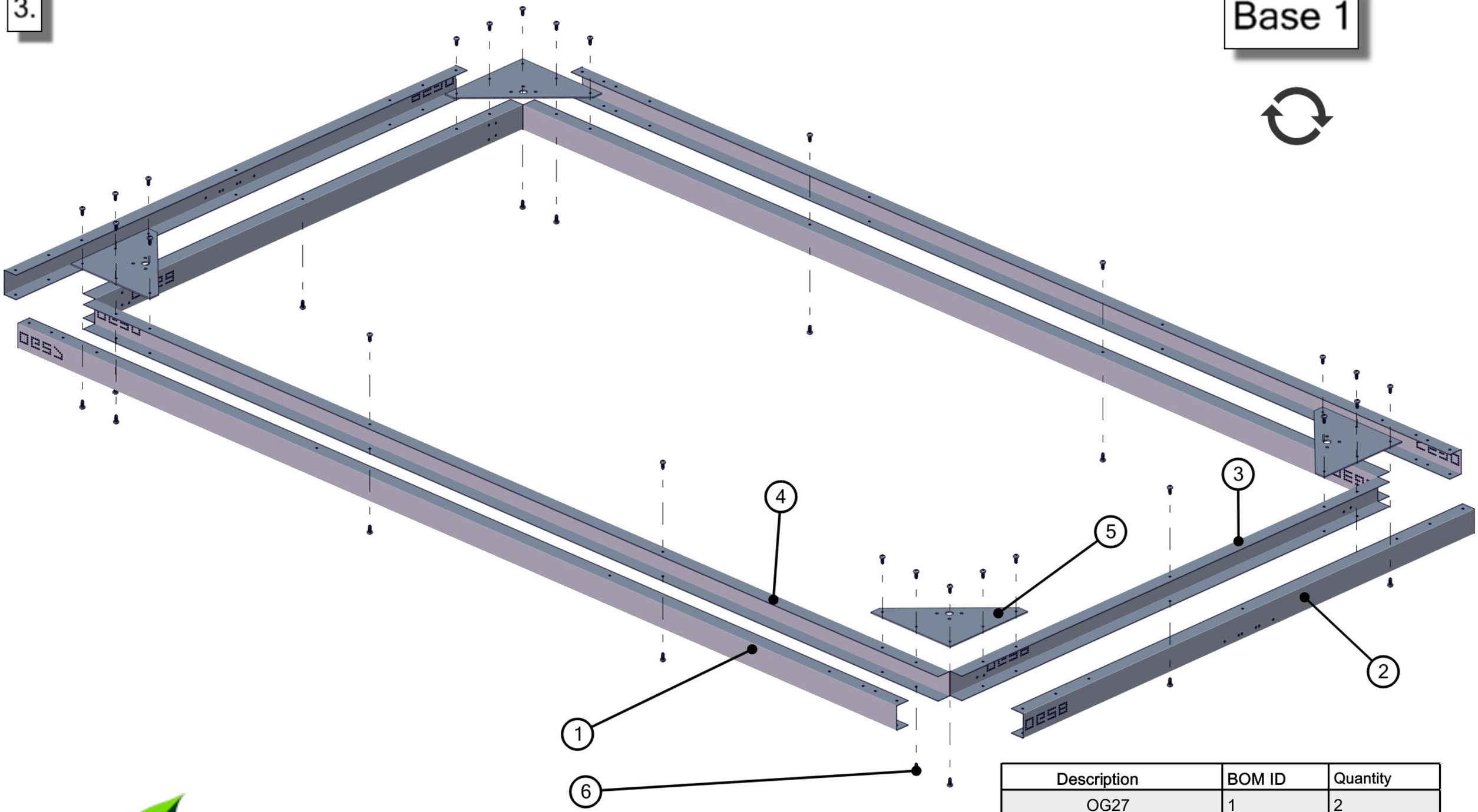

Description	BOM ID	Quantity
OG27	1	2
OG28	2	2
OG29	3	2
OG30	4	2
OG03	5	4
Screw 4.2x16	6	40

ECOSLIDER

4.

Base 2

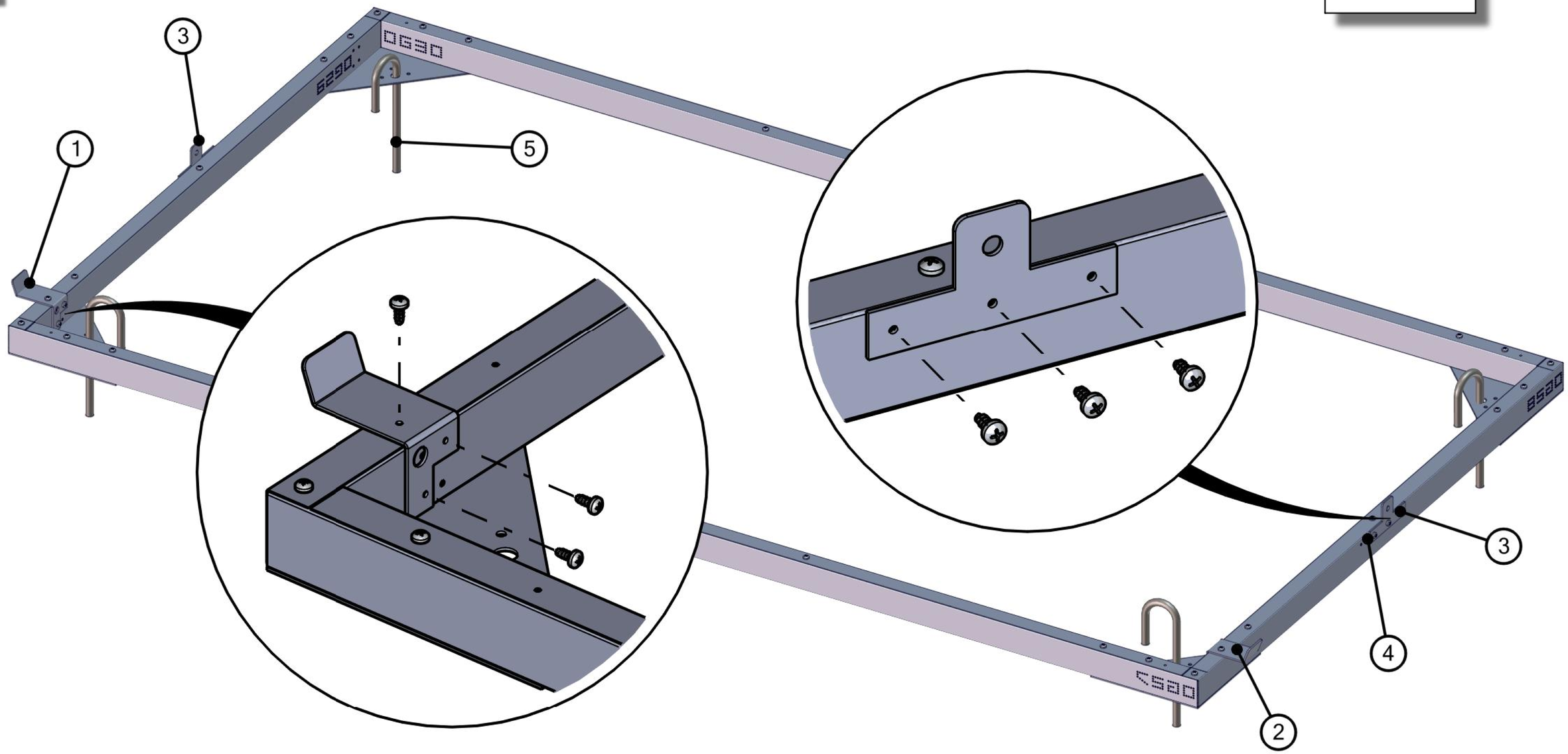

Description	BOM ID	Quantity
OG04L	1	1
OG04R	2	1
OG16	3	2
Screw 4.2x16	4	12
Steel bar	5	4

ECOSLIDER

5.

Inner walls assembly

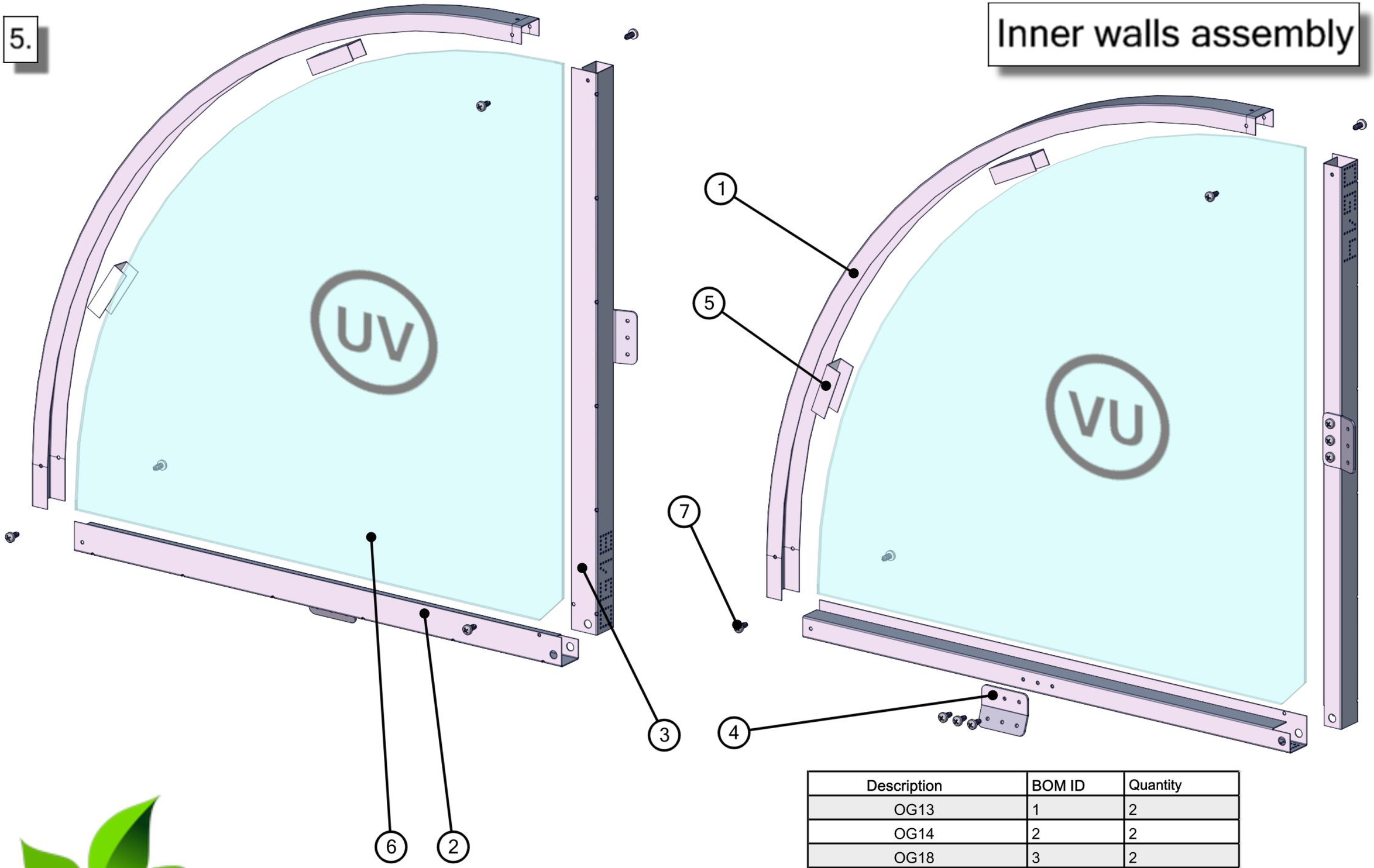

Description	BOM ID	Quantity
OG13	1	2
OG14	2	2
OG18	3	2
OG02	4	4
Spacer	5	4
Polycarbonate 535x535	6	2
Screw 4.2x16	7	22

ECOSLIDER

6.

Outer walls assembly

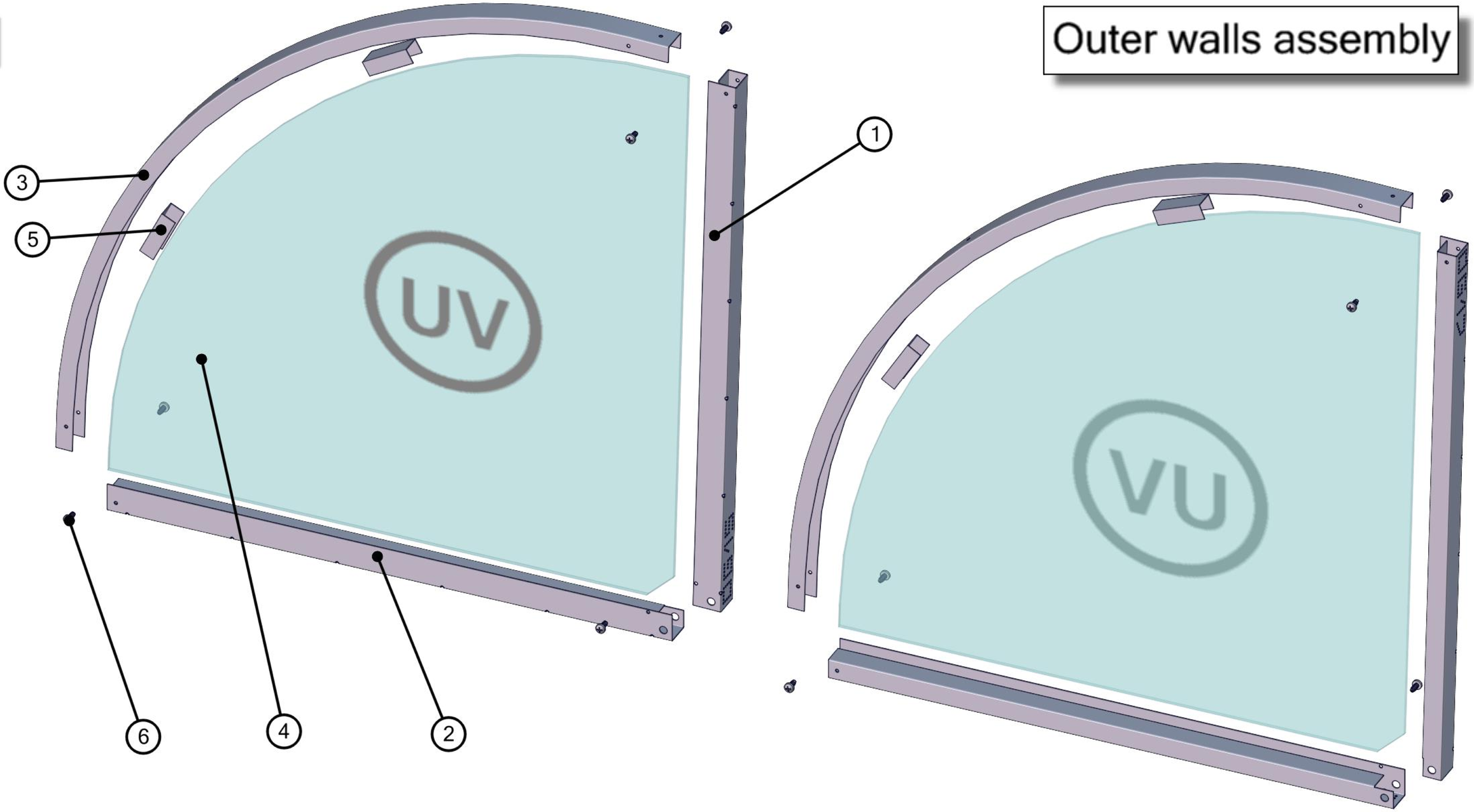

Description	BOM ID	Quantity
OG15	1	2
OG17	2	2
OG31	3	2
Polycarbonate 582x567	4	2
Spacer	5	4
Screw 4.2x16	6	10

ECOSLIDER

7.

Inner part's assembly 1

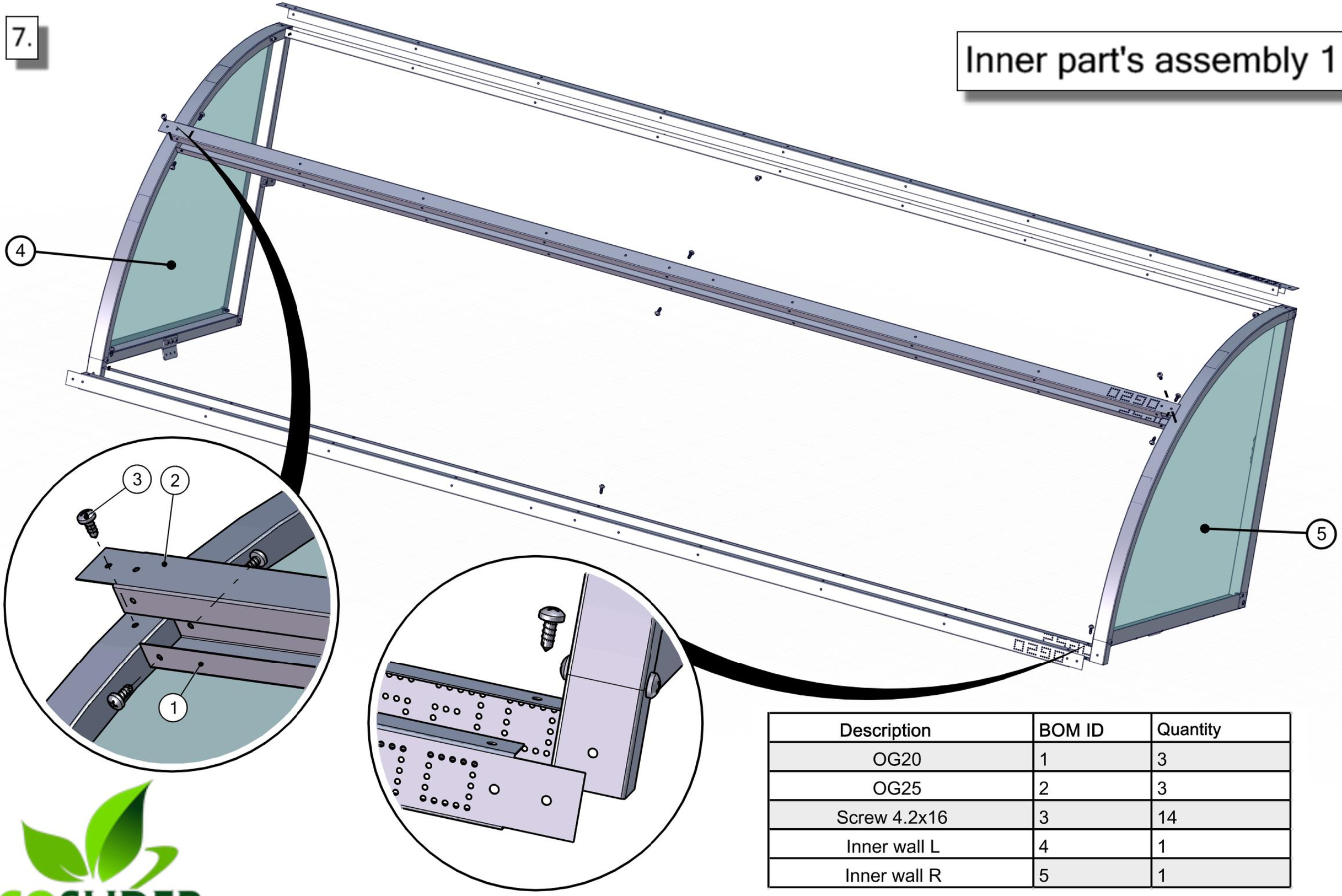

Description	BOM ID	Quantity
OG20	1	3
OG25	2	3
Screw 4.2x16	3	14
Inner wall L	4	1
Inner wall R	5	1

ECOSLIDER

8.

Inner part's assembly 2

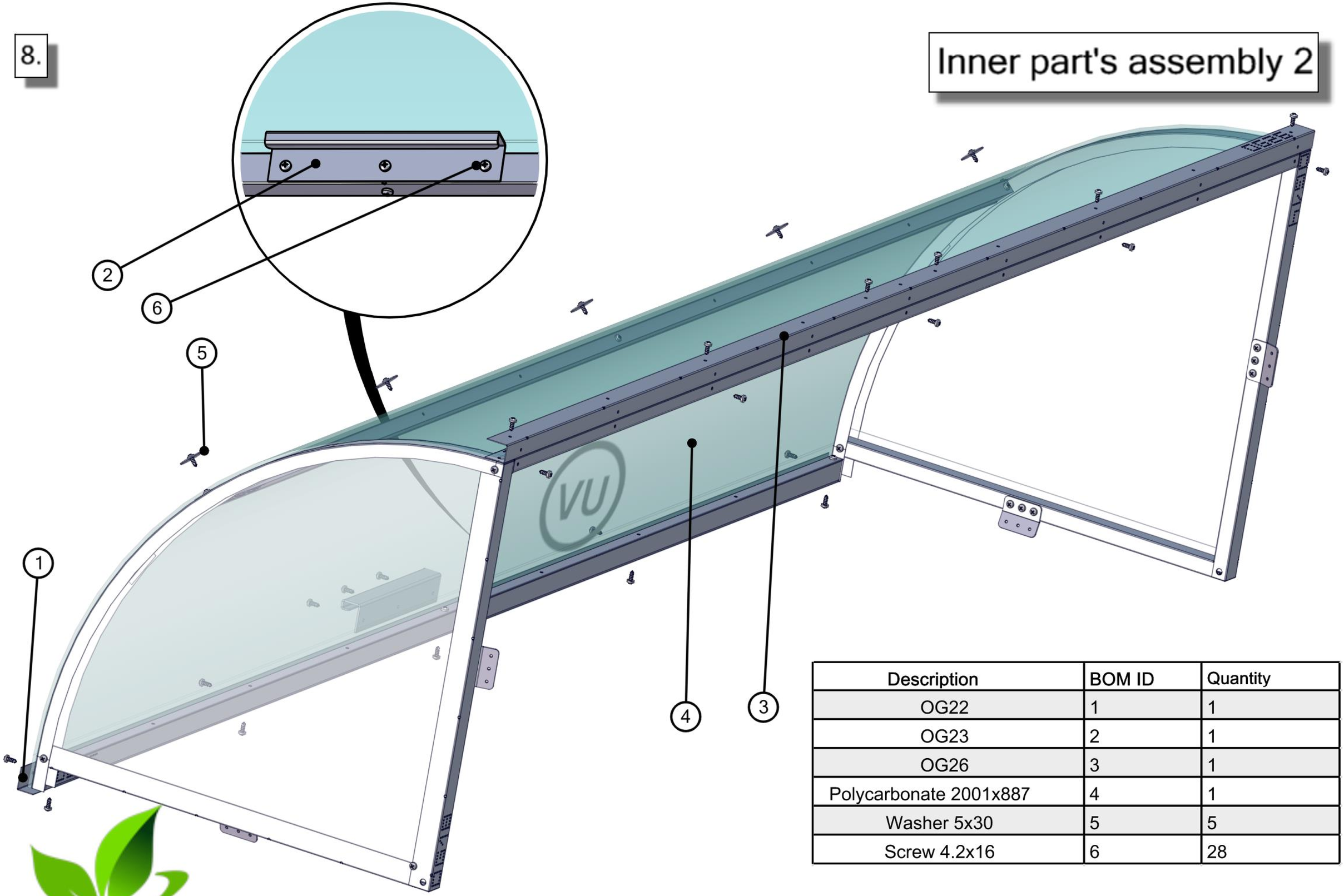

Description	BOM ID	Quantity
OG22	1	1
OG23	2	1
OG26	3	1
Polycarbonate 2001x887	4	1
Washer 5x30	5	5
Screw 4.2x16	6	28

ECOSLIDER

9.

Outer part's assembly 1

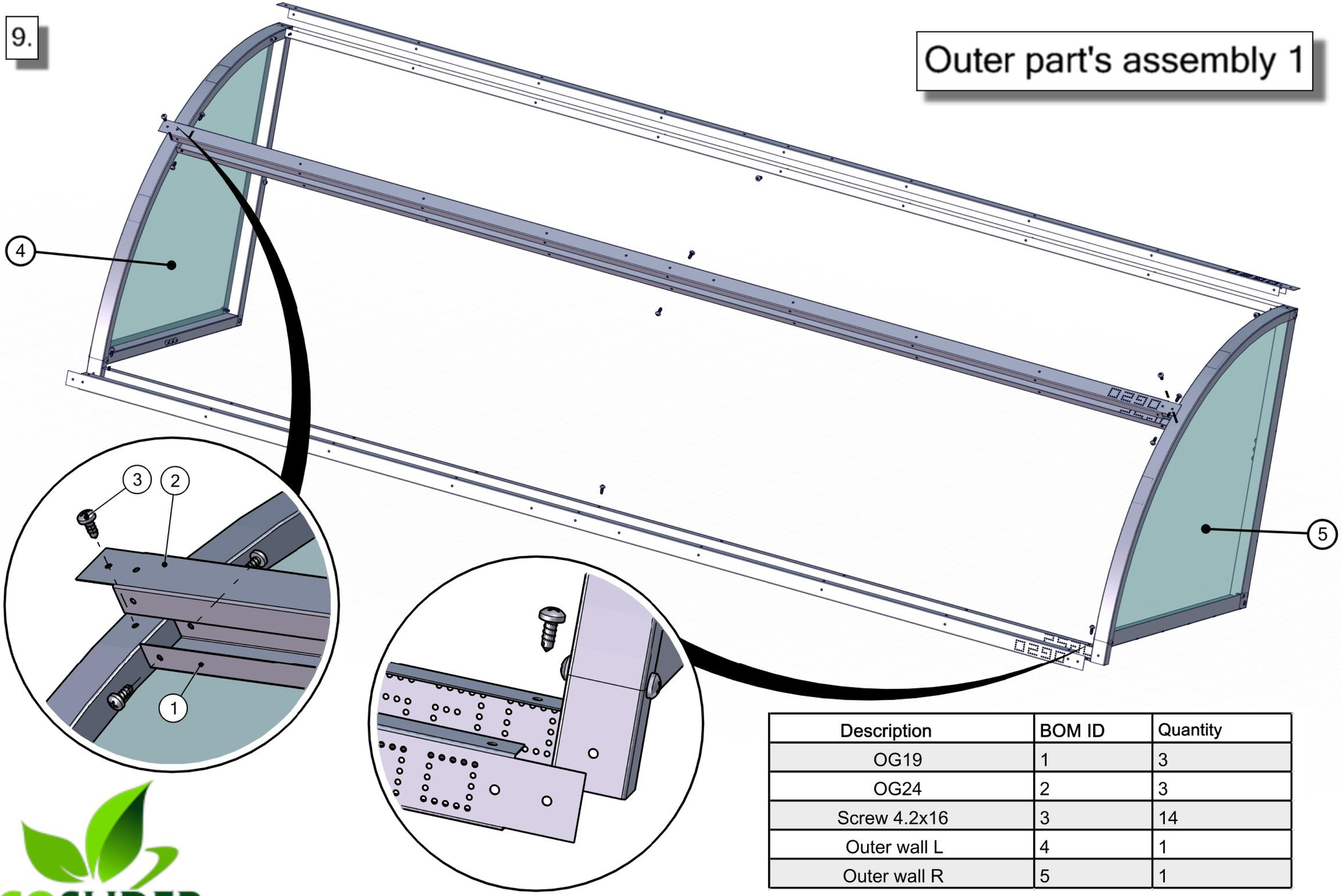

Description	BOM ID	Quantity
OG19	1	3
OG24	2	3
Screw 4.2x16	3	14
Outer wall L	4	1
Outer wall R	5	1

ECOSLIDER

10.

Outer part's assembly 2

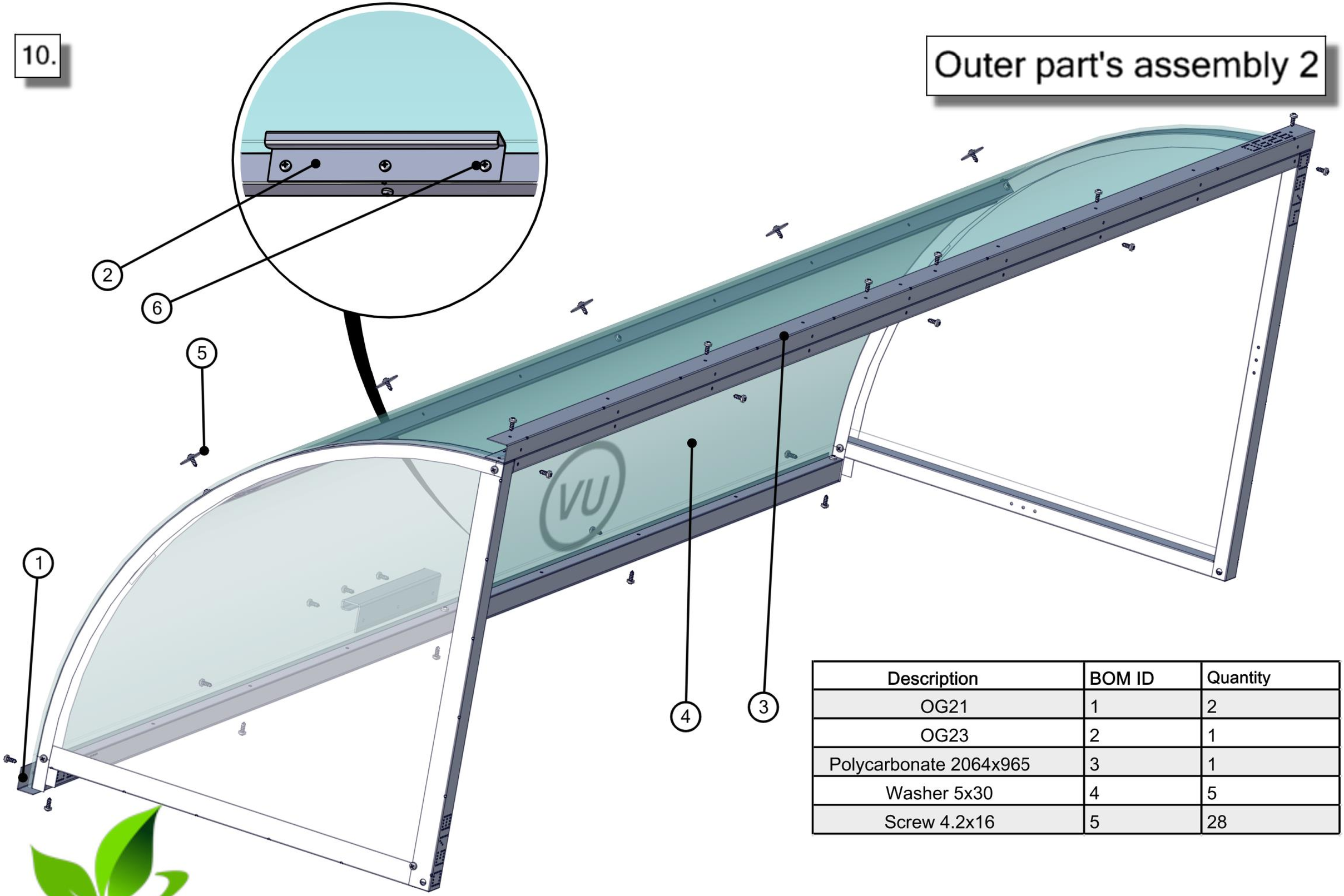

Description	BOM ID	Quantity
OG21	1	2
OG23	2	1
Polycarbonate 2064x965	3	1
Washer 5x30	4	5
Screw 4.2x16	5	28

ECOSLIDER

11.

Final assembly

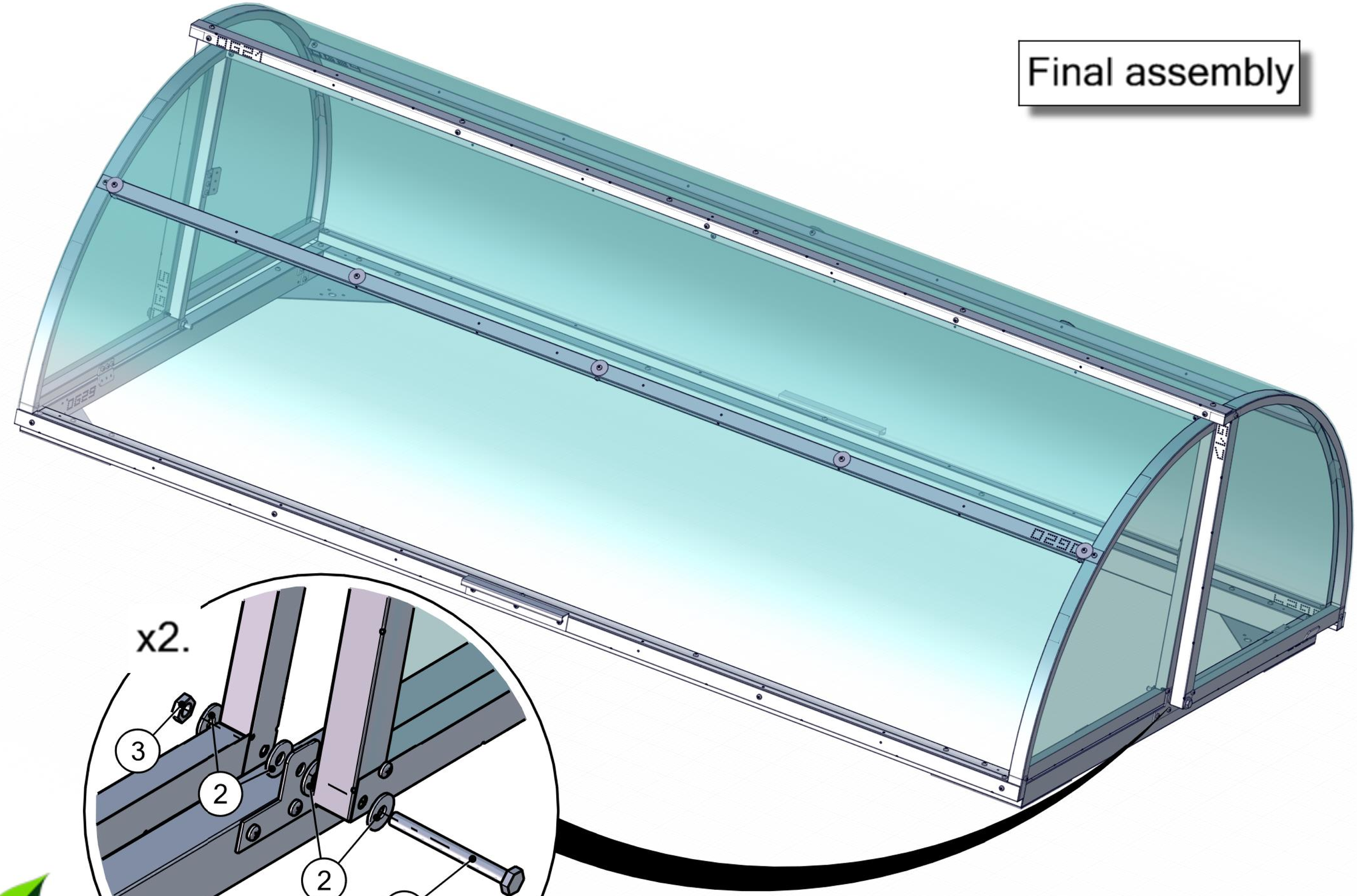

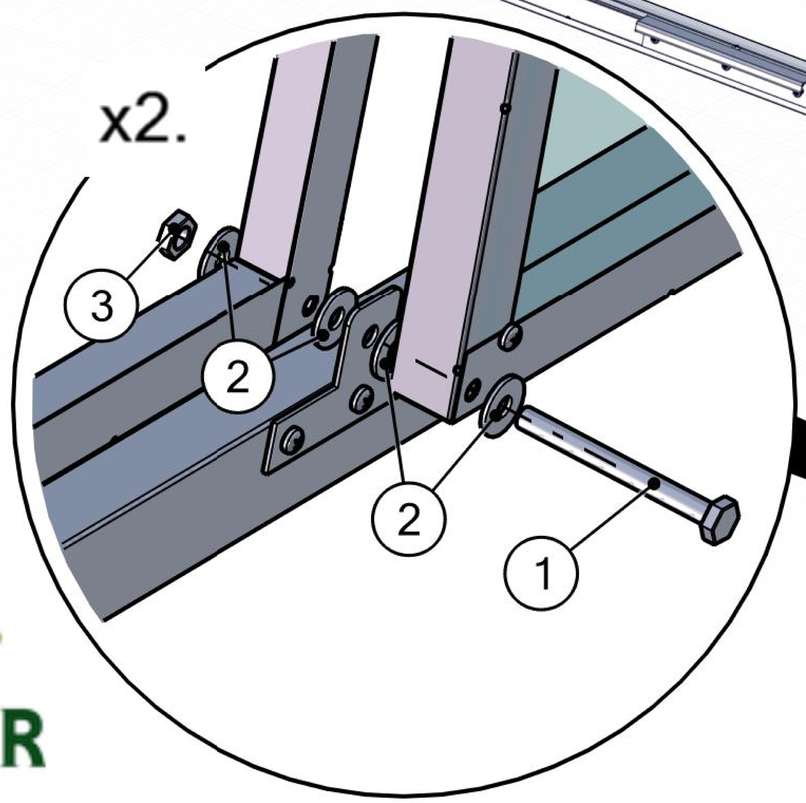

Description	BOM ID	Quantity
Bolt M8x80	1	2
Washer M8x30	2	8
Nut M8	3	2

ECOSLIDER